Systems and Processes in Wineries

engineering for a better world

GEA Mechanical Equipment

Contents

Innovative Processes and Systems for Economic Winemaking

The global wine market is undergoing radical change. More and more wine-growing estates are integrating mechanical separation technology into the production of their wines to make the process more efficient and more competitive. As technology leader, the GEA Westfalia Separator Group offers innovative processes and systems. They can be used across a wide range of production stages and ensure highest quality and economy – from table wine to wines from specially selected grapes such as "Beerenauslese".

Besides centrifugation with decanters and separators, the company is also a specialist in membrane filtration with ceramic elements. The GEA Westfalia Separator Group therefore represents the complete spectrum of mechanical separation technology from diverse preliminary process stages through coarse and fine clarification right up to polishing.

An impressive result of this push to innovate is the **vinex** process developed by the GEA Westfalia Separator Group for continuous and gentle grape juicing. Decanters ensure maximum yield and premium quality. This makes **vinex** the preferred juicing method for a large number of vintners. This eliminates numerous disadvantages of conventional processes such as inhomogeneous must quality, costly pre-storage of the mash and inadequate hygiene. In addition to juicing, the use of decanters makes sense wherever liquids with a high solid content have to be clarified. Such applications include must clarification, thickening of lees from must tanks, pre-clarification of yeast tank bottoms from the fermentation tanks as well as the thickening of fining trub.

Separators are used in all process stages in which smaller solid particles have to be removed. Wineries use them, among other things, for the wine clarification in the first racking, fining racking and for tartrate stabilisation. Timely clarification is often a decisive factor in developing a clean taste and is consequently crucial to the overall quality and market value of a wine.

Whereas self-clarification through sedimentation is time-consuming and imperfect, high-performance clarifiers from the GEA Westfalia Separator Group realize all fine clarification processes in considerably less time.

Separated musts require less SO_2 in the downstream process because part of the oxygen-transferring oxydases are removed in the must stage together with the lees. As a rule, half of the normally required SO_2 dosage is adequate for the development of such wines. This is of decisive importance for the entire "sulphur budget". Wines from separated musts can be stabilized, filtered and bacterially clarified more efficiently and economically. The addition of fining agents can also be reduced. Moreover, the fermentation process with separated must is more uniform and favourable which has a positive impact on the development of the wine. Savings in filter aid can also be substantial.

Mechanical separation technology from the GEA Westfalia Separator Group is indispensible today for economic production and simultaneously to give the wine its typical properties: clean, elegant, bright, flowery, noble, aromatic.

The advantages at a glance:

- Favourable influence on quality
- Production of clean, characteristic wines
- No impairment of taste
- Higher yield
- More uniform fermentation process
- Better wine clarification
- Fewer lees after fermentation
- Substantial extension of filter life and hence significant savings of filter aid (layers and kieselguhr)
- Savings in labour time
- Significantly reduced SO_2 requirements
- Timely separation of the fining trub (shortening of the fining time)
- Lower space requirement (storage capacity)
- Fast production of ready-to-sell wines

Solids in Must and Wine

Solids in the juice mainly result from the grapes. Juice extraction requires the destruction of the cell structure, particularly the protective skin.

Depending on the given processing technology, more or less large cell particles reach the must. Gentle must and grape processing, thus, facilitates juice pre-clarification. For grape processing the entry of micro organisms (yeasts, bacteria, moulds) clinging to the grapes should not be underestimated. The same is true for dust and sand which pollute grapes and leaves and thus also join the juice. Mechanical harvesting particularly enhances their concentration.

The skin (exocarp) makes up about 20 percent of the whole grape, is very solid and has protective function. With red grapes, this part of the tissue contains the pigments.

The flesh (mesocarp) contains the juice, in which sugar, acids and minerals are dissolved. Its cellular tissue is particularly delicate.

Grape and must processing should be organized so as to create minimum solids content. In practice, this means that grapes or must should not be submitted to large gravitational influences in feeding or pumping.

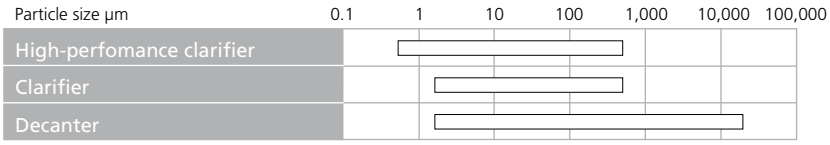

Application range of centrifuges according to particle size

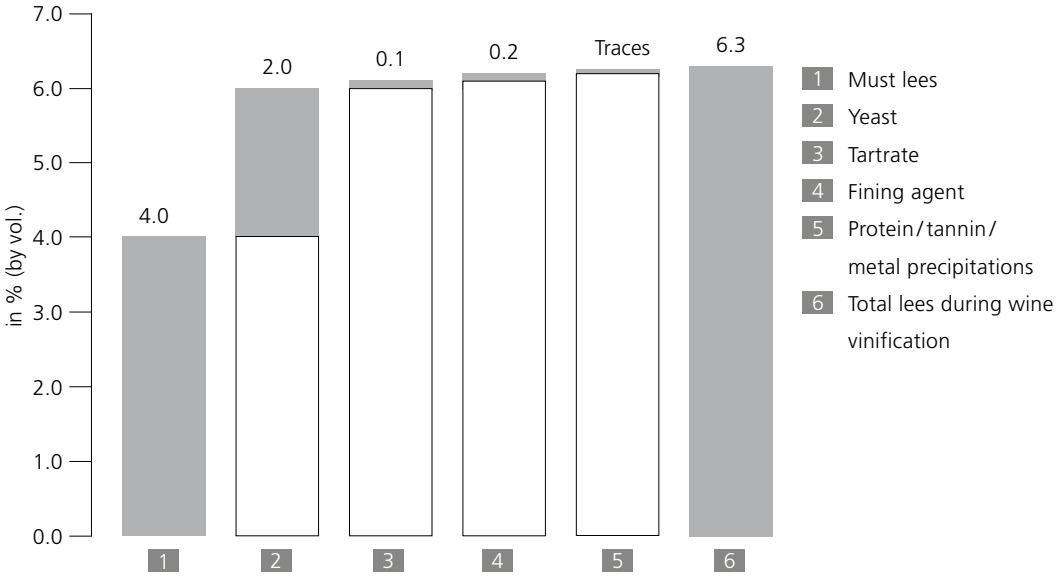

Lees development during the vinification process (centrifugally dry)

Moreover, gentle pressing systems should preferably be used with juicing.

The GEA Westfalia Separator **vinex** process developed by the GEA Westfalia Separator Group dispenses with pressing. Continuous grape juicing with the help of decanters is anew way of gentle, quality-oriented wine production.

Lees consist mainly of wine yeast (necessary for fermentation), bacteria, as well as accompanying solids. Additionally, colloids difficult to separate play an essential part.

These colloids may e.g. develop through

- Too intensive must processing
- Moulds on grapes
- Yeasts or bacteria metabolized during alcoholic fermentation
- Heat treatment of must

Grape structure:

Pericarp

1 Exocarp (skin)
2 Loculi
3 Septum
4 Mesocarp (Flesh)
5 Cuticula
6 Dorsale vascular bundle

Vascular bundle

10 Ovular
11 Ventral
12 Dorsal
13 Stem base
14 Core

Seeds

7 Endosperm
8 Testa
9 Germ bud

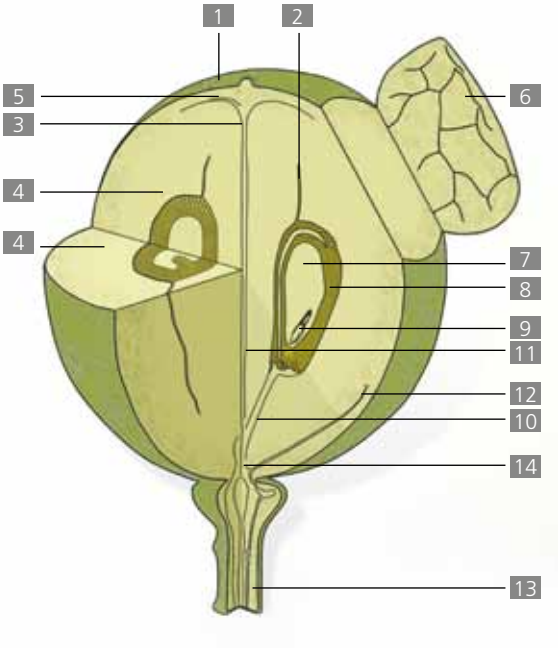

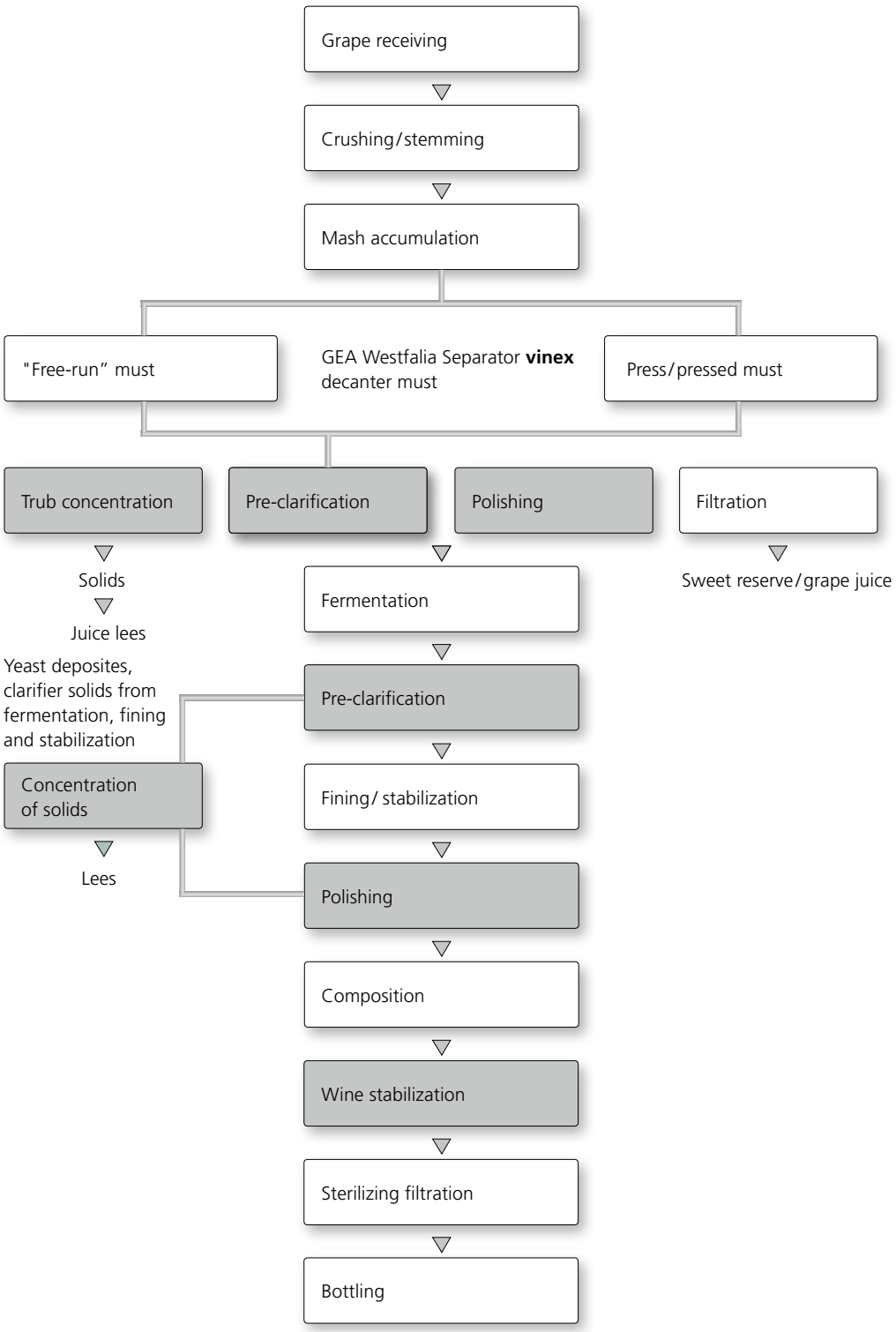

Possible applications of clarifiers and decanters in wine production

Coarsely dispersed yeasts or bacteria are easily separated out with centrifugal force, as they have relatively large diameters and sufficient density difference compared to the liquid.

Colloidal connections (pectin matters, proteins etc.), on the other hand, create difficulties in separation because of significantly smaller particle diameters and lacking density difference due to stored mono-hydrates. Particularly pectin matters as protective colloids may keep other solids suspended.

Corresponding fining measures are advantageous for economic clarification.

Clarifiers for Wine and Sparkling Wine Production

Characteristic data
Striving for more efficiency and automation are ongoing processes in wineries with technologists continuously working on new processing techniques.

Clarifiers play an essential role herein. With their high development stage they ensure perfect clarification of must, wine and sparkling wine.

With varying solids content in the feed, automatic control systems are used which initiate bowl ejections at optimum times.

The "self-thinker" impulse actuates a precise partial ejection cycle, so that the same quantity of solids is always ejected. Total ejections can be included. After clarification is completed, the centrifuge can be easily chemically cleaned (CIP = cleaning-in-place). Cleaning solutions are recycled through the unit in a closed system with sediment being dissolved and discharged.

Capacity data
Capacities indicated in this brochure for the different models are effective throughput capacities. They differ from the given nominal capacities which are bowl-design related.

Nominal capacity
This is the maximum hydraulic capacity of a bowl.

Effective capacity
This is product- and process-related and less than the nominal capacity. With a given product, capacity always depends on the desired degree of clarification. "percent by vol." figures, given in this brochure, are based on the results of a spin test in a test tube centrifuge. Separated solids amounts are, therefore, of a centrifugally dry consistency.

Effective capacity depends on the:
- Size of solid particles to be separated out
- Difference in specific gravity between solids and liquid and the viscosity of the liquid (degrees Oechsle for juice; alcohol content for wine)
- Solids content of the liquid to be clarified

To achieve the highest possible effective capacity, the bowl must have a high capacity factor. The capacity factor contains only relevant design values of the bowl for separating efficiency and serves as a comparison figure for similar centrifuges.

Must Clarification

Centrifuges with self-cleaning bowls are used for clarifying the must. The machines are equipped with a "self-thinker" control system or turbidity meter to ensure highly concentrated solids discharge and low must losses.

To prevent aeration of the must, hydrohermetic (liquid seal) or hermetic design clarifiers are used. With hydrohermetic design the must is discharged under pressure by means of a centripetal pump, whereby, in addition, a stationary disc submerged in the rotating liquid creates a liquid seal.

To prevent coarse solids from entering the clarifier, or to obtain a certain pre-clarification effect with extremely high solids content in the feed liquid, a rotary brush strainer is installed ahead of the clarifier. The use of a hydrocyclone in the clarifier feed line has proved most effective with relatively high amounts of sandy particles in the must. This reduces erosion at the wear parts of the bowl.

Advantages

- Enhancement of quality by fast removal of solids immediately after pressing (short contact time). Undesirable solids, such as insecticides, de-acidizing sediment and other do not reach the fermentation stage
- Production of clear quality wines
- Efficient pre-clarification permits controlled fermentation with pure yeast
- Compared with natural tank sedimentation savings in tank space, labour and time. In warm climates savings in cooling capacity due to the immediate removal of solids.
- Continuous processing
- Very low product losses
- Less SO_2 requirement
- Oxygen transferring enzymes are removed with solids
- Less fining agents required in the wine
- Uniform fermentation. This enhances the development of the wine (in warm climates saving in cooling capacity).
- Reduced and healthier yeast deposits
- Processing free of air
- Easy cleaning by CIP (CIP = cleaning-in-place)

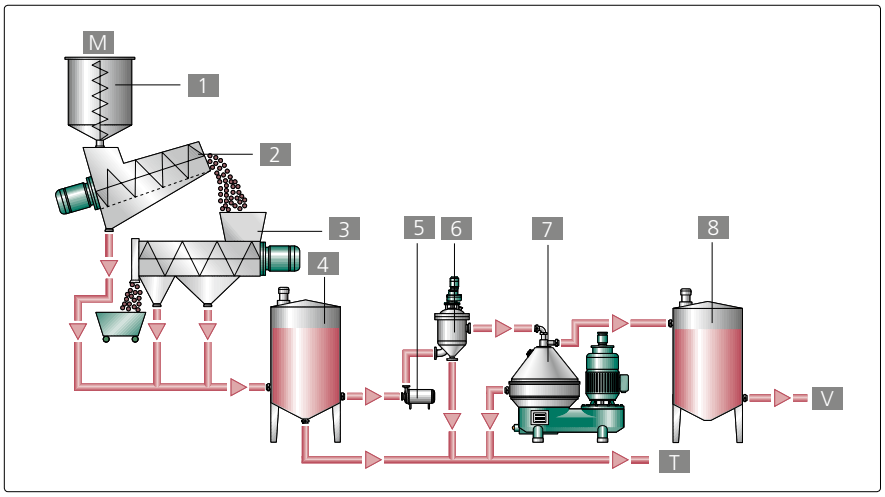

1 Mash container
2 Pre-juicer
3 Screw press
4 Must tank
5 Pump
6 Rotary brush strainer
7 Clarifier
8 Must tank

M Mash
T Lees
V To fermentation

Must clarification after screw press

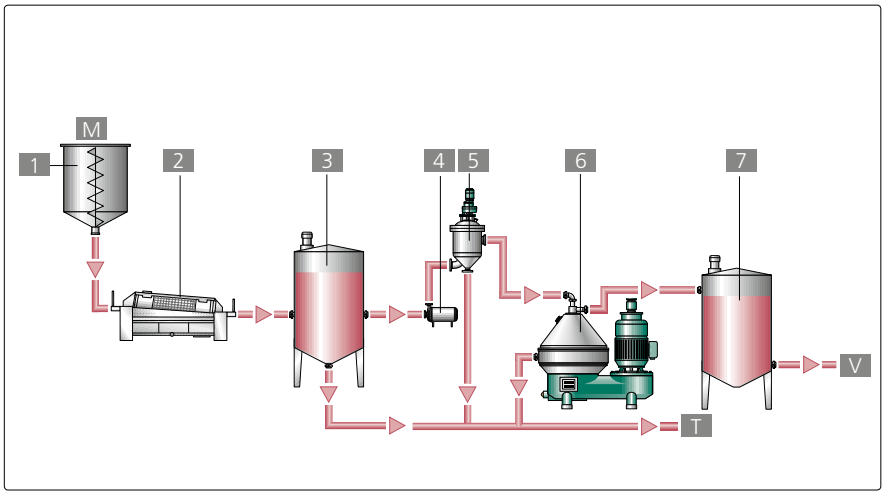

1 Drainer tank
2 Tank press
3 Must tank
4 Pump
5 Rotary brush strainer
6 Clarifier
7 Must tank

M Mash
T Lees
V To fermentation

Must clarification after pneumatic press

Storage of sweet reserve or production of grape juice

The production of juice for sweet reserve is only possible with efficient juice pre-clarification. Clarifiers for juice/must and wine clarification can also be used for this purpose. This also applies to the production of grape juice which requires a higher degree of clarification.

Capacity

In order to obtain the optimum degree of clarification with the clarifiers mentioned below for sweet reserve or grape juice production, throughput capacities given in the table for clarification of juice/must have to be reduced by 1/3.

After appropriate centrifugal pre-clarification the most difficult filtering problems can be overcome and considerable savings in filter aids achieved with super clarifiers (see pages 14, 15).

Here the solids content in the must can be higher or lower than that stated above, depending on the type of pressing. In addition, the vintage can vary from year to year which may alter the specific gravity of the must among other things.

It must also be considered that the clarifier's throughput capacity can be increased by pre-treatment of the must with fining agents.

If the solids content (max. 18 percent by vol.) and the specific gravity of the must are very high, throughput capacity is correspondingly lower. For each winery the correct residual solids content in clarified must can be individually adjusted by regulating throughput capacity.

GEA Westfalia Separator ecoplus		GEA Westfalia Separator hyvol® clarifiers		GEA Westfalia Separator hydry® clarifiers	
	Max. capacity *		Max. capacity *		Max. capacity *
GSC 18 **	1000 l/h	GSE 30	4000 l/h	GSC 45	6000 l/h
GSC 40 **	2000 l/h	GSE 50	5000 l/h	GSC 75	8000 l/h
GSC 60 **	8000 l/h	GSE 75	8000 l/h	GSC 95	12,000 l/h
GSC 110	12,000 l/h	GSE 100	9000 l/h	GSC 150	18,000 l/h
		GSE 125	14,000 l/h	GSC 200	20,000 l/h
		GSE 180	15,000 l/h		
		GSE 200	20,000 l/h		
		GSE 300	21,000 l/h		

* Capacities may vary according to juice
** Machine with cast steel solids collector

Must Clarification with Flotation in Clarifier Outlet

In this process, the clarifier is combined with a flotation system to clarify the must. A flotation system is installed in the outlet of the clarifier for this purpose. Sterile air and gelatine are added directly preceding the constant pressure valve. High discharge pressure of 5 – 6 bar at the outlet of the clarifier is employed, which is necessary to dissolve oxygen in adequate quantities and as small bubbles in the product. 2 – 3 g/hl of gelatine has proved to be the optimum quantity to achieve an adequate flocculation. Around 60 – 90 l/m^3 has been found to be a sufficient air volume for flotation.

In the process, the fine turbid phase, remaining in suspension directly after the clarifier, is largely extracted by flotation. Equally, solids capable of centrifuging which have not been extracted by the clarifier due to the higher capacity are also floated. The foam rising in the tank after depressurization is completely stabilized by the floated solids and forms a definite separating layer to the clear phase. The separation of the turbid phase from the polished must after drainage can be conducted very accurately.

The tank is drained from the bottom towards fermentation. Stable foam remaining in the tank is sprayed out. As the turbid phase is dry and the clear phase can be drained as far as the definite separating layer, further processing of the turbid phase is unnecessary.

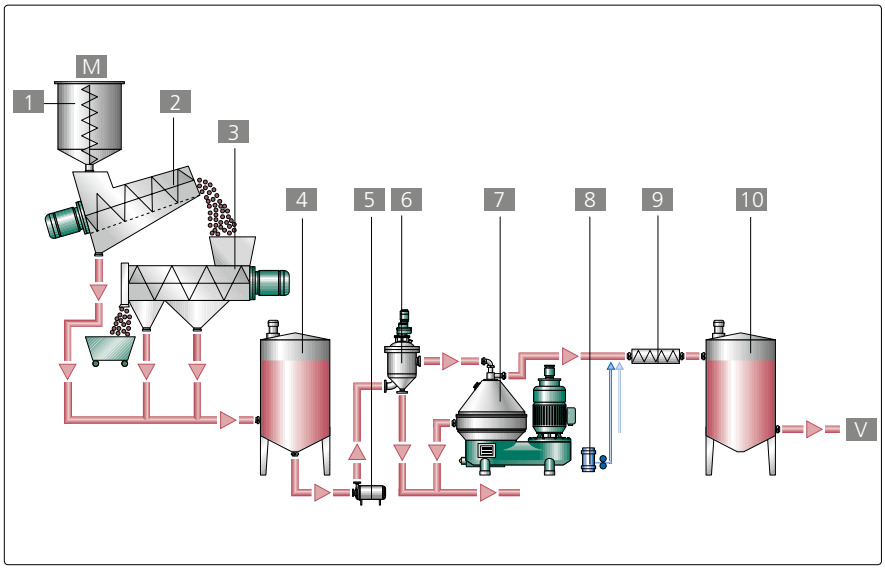

1 Drainer tank
2 Pre-juicer
3 Screw press
4 Must tank
5 Pump
6 Rotary brush strainer
7 Clarifier
8 Gelatine / air feed
9 Static mixer
10 Must tank

M Mash container
T Lees
V To fermentation

Must clarification with flotation in clarifier discharge

Advantages

- About five times lower consumption of gelatine and air. The greater part of solids has already been extracted by the clarifier
- Foam volume is by half smaller than with flotation only
- Versatile use of the clarifier – also for clarifying young wine, for fining, processing turbid phases and extracting tartrate crystals
- Even cold must having begun to ferment (10 °C), which is difficult to clarify by flotation, can be easily clarified in a clarifier with flotation at the outlet
- The clarifier can be operated at higher throughput rates at the cost of a lower degree of clarification. The remaining turbid phase is further reduced by flotation. This saves considerable time in autumn
- The high pressure at the discharge of the clarifier is employed for flotation. Expensive pressure pumps or pressurized vessels are unnecessary
- Improved clarification standardization for must from different press systems which, therefore, have different trub contents

Diagram showing the influence of must pre-clarification on fermentation process.

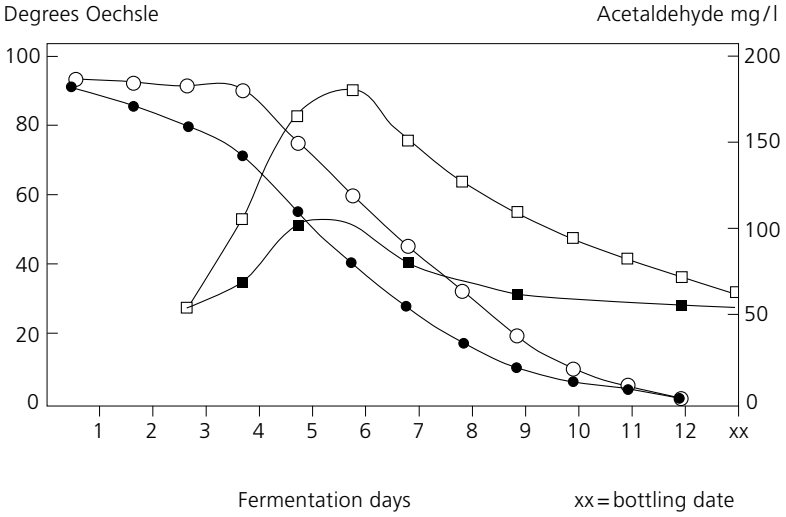

Influence of must pre-clarification on fermentation process and acetaldehyde formation with white wine (from Troost 1988)

- Clarified (Oechsle)
- Turbid phase (Oechsle)
- Clarified (acetaldehyde)
- Turbid phase (acetaldehyde)

Clarification of Wine, First Racking

The same centrifuges are used for clarifying wine and must. Taste and stability of the wine depend substantially on the moment, degree and method of clarification. Particularly turbid young wines, which are difficult to clarify by other methods, can be easily clarified in the centrifuge. In order to prevent aeration of the wine, hydrohermetic or hermetic design clarifiers are used. These clarifiers promote the unproblematic development of fresh and elegant wines. Clarifiers easily remove fining trub during the second stage.

Advantages

- Enhanced quality as clarification takes place at the right moment
- Production of high quality wines
- No flavour impairing by the wine being left too long on the yeast (possible formation of H_2S)
- Depending on whether a reduction of biological acid is desired, residual content can be individually adjusted by regulating throughput capacity
- Processing free of air
- No CO_2 or bouquet losses
- Easy cleaning by CIP

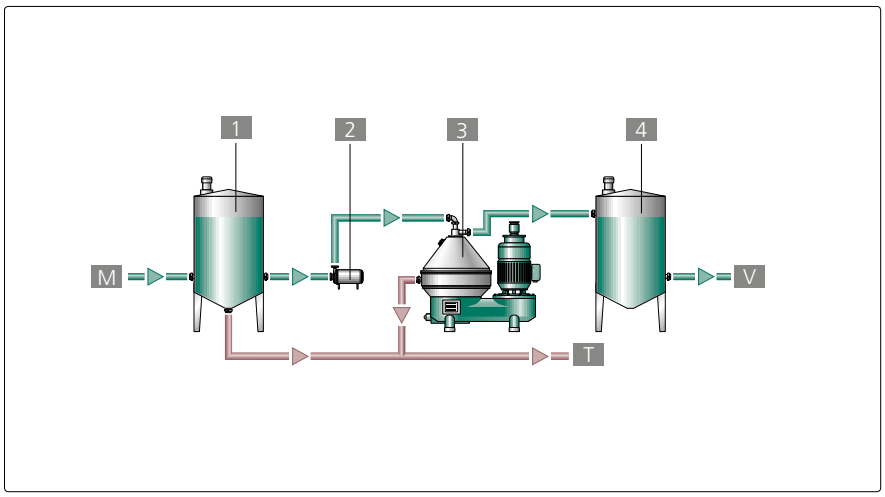

1 Fermentation tank
2 Pump
3 High-peformance clarifier/clarifier
4 Wine tank (fining tank)

M From fermentation tank
T Lees
V For ultrafine clarification

Clarification of wine, first racking

High quality wines characterize clarification quality.

GEA Westfalia Separator eco**plus**		GEA Westfalia Separator hy**vol**® clarifiers		GEA Westfalia Separator hy**dry**® clarifiers		High-performance clarifiers	
	Max. capacity*		Max. capacity*		Max. capacity*		Max. capacity*
GSC 18 **	3000 l/h	GSE 30	8000 l/h	GSC 45	11,000 l/h	CRA 160	12,000 l/h
GSC 40 **	7000 l/h	GSE 50	12,000 l/h	GSC 75	13,000 l/h	CSA 500	28,000 l/h
GSC 60 **	13,000 l/h	GSE 75	13,000 l/h	GSC 95	16,000 l/h		
GSC 110	18,000 l/h	GSE 100	18,000 l/h	GSC 150	28,000 l/h		
		GSE 125	20,000 l/h	GSC 200	32,000 l/h		
		GSE 180	25,000 l/h				
		GSE 200	32,000 l/h				
		GSE 300	40,000 l/h				

* Capacities may vary according to young wine
** Machine with cast steel solids collector

Clarification of Wine before Polishing, Second Racking (Fining Stage)

The same clarifiers used for clarifying must and wine during first racking can also be used for this process. If a wine is fined, it is not necessary after the appropriate reaction time to wait for complete sedimentation of the solids before centrifugal clarification is carried out. Solid particles and fining flocs still in suspension can be separated out immediately.

Advantages

- Considerably increased filter life and savings in filter aids
- Immediate removal of fining agent after reaction time
- Fast finish of ready-for-sale wines
- Greater compaction of fining agent
- Processing free of air
- No CO_2 or bouquet losses
- Easy cleaning by CIP

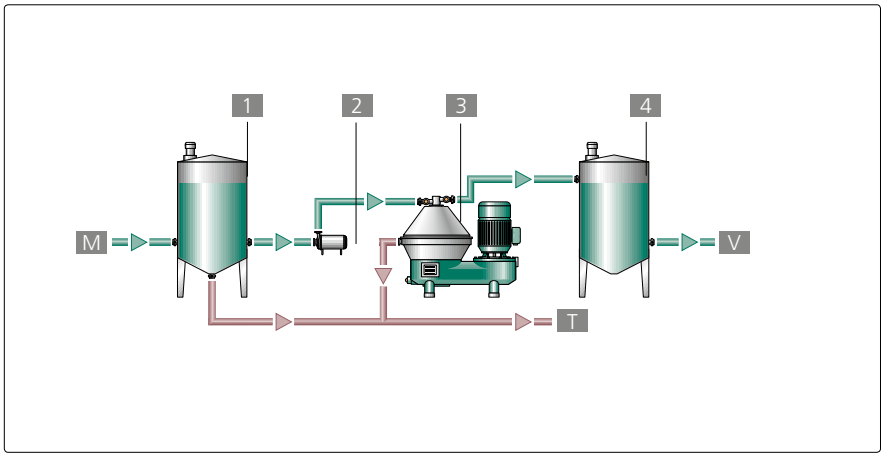

1 Fining tank
2 Pump
3 High-peformance clarifier/clarifier
4 Storage tank

M From fermentation/ first rack
T Lees
V To bottling

Clarification of wine before polishing, second racking (fining stage)

GEA Westfalia Separator eco**plus**		GEA Westfalia Separator hy**vol**® clarifiers		GEA Westfalia Separator hy**dry**® clarifiers		Super clarifiers	
	Max. capacity *		Max. capacity *		Max. capacity *		Max. capacity *
GSC 18 **	1000 l/h	GSE 30	3000 l/h	GSC 45	4000 l/h	GRA 160	10,000 l/h
GSC 40 **	3000 l/h	GSE 50	5000 l/h	GSC 75	6000 l/h	GSA 500	24,000 l/h
GSC 60 **	6000 l/h	GSE 75	6000 l/h	GSC 95	8000 l/h		
GSC 110	8000 l/h	GSE 100	8000 l/h	GSC 150	16,000 l/h		
		GSE 125	10,000 l/h	GSC 200	20,000 l/h		
		GSE 180	13,000 l/h				
		GSE 200	20,000 l/h				
		GSE 300	28,000 l/h				

* Capacities may vary according to fining agent
** Machine with cast steel solids collector

Wine Polishing

Since winemaking is not a continuous process, the classical clarifier can be used for both pre-clarifying the must and for clarifying the freshly fermented wine. This is also the case with the super clarifier which can be used for polishing the wine both after fining and after stabilization, thereby rendering coventional filtration stages superfluous.

For wines with residual sugar content a sterilizing filter should be installed behind the clarifier as precautionary measure. This clarifier has been developed for separation of the finest solid particles which previously could be removed only by filtration.

The clarifier's high bowl speed of 6,800 rpm produces a centrifugal field equivalent to about 15,000 times the acceleration due to gravity (g-factor = maximum centrifugation factor)

Production of wine and sparkling wine
In degree of achievable clarification, the super clarifier is comparable to the diatomaceous-earth filter. With easily clarified wines clarification efficiency extends even into the microbiological area of sterilizing filtration. The use of a sterilizing filter downstream is recommended, however, as a precautionary measure. Large savings in filter aids are achieved by centrifugal polishers especially with difficult wines.

The super clarifier has also proved very successful for polishing sweet reserve which must be filterable in the shortest possible time.

Type	Effective capacity in wine polishing
GSA 500	24,000 – 28,000 l/h
GRA 160	12,000 l/h
GSE 65	7000 l/h
GSE 160	12,000 l/h
GSE 230	18,000 l/h
GSE 400	24,000 l/h

* Depending on the type of wine and pre-treatment. Discharged liquid is so highly polished that it can immediately be passed through a filter (e.g. sterilizing filter).

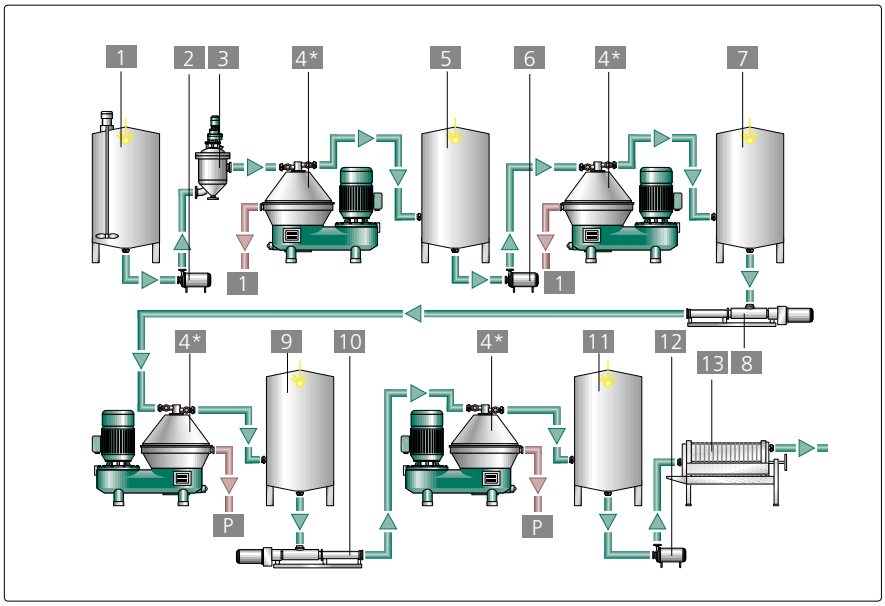

1 Must tank
2 Pump
3 Rotary brush strainer
4 Clarifier/ ultra fine clarifier *
5 Fermentation tank
6 Pump
7 Intermediate tank
8 Pump
9 Stabilizing tank
10 Pump
11 Storage tank
12 Pump
13 Filtration

P Solids

Multi-functionality of clarifier
* Clarifier for multifunctional use

Advantages

- Continuous operation
- Greater yield
- No pigment losses due to absorption
- No loss of bouquet
- No intake of oxygen
- No SO_2 or CO_2 losses
- No impairment of flavour
- Use of filter aids reduced to minimum

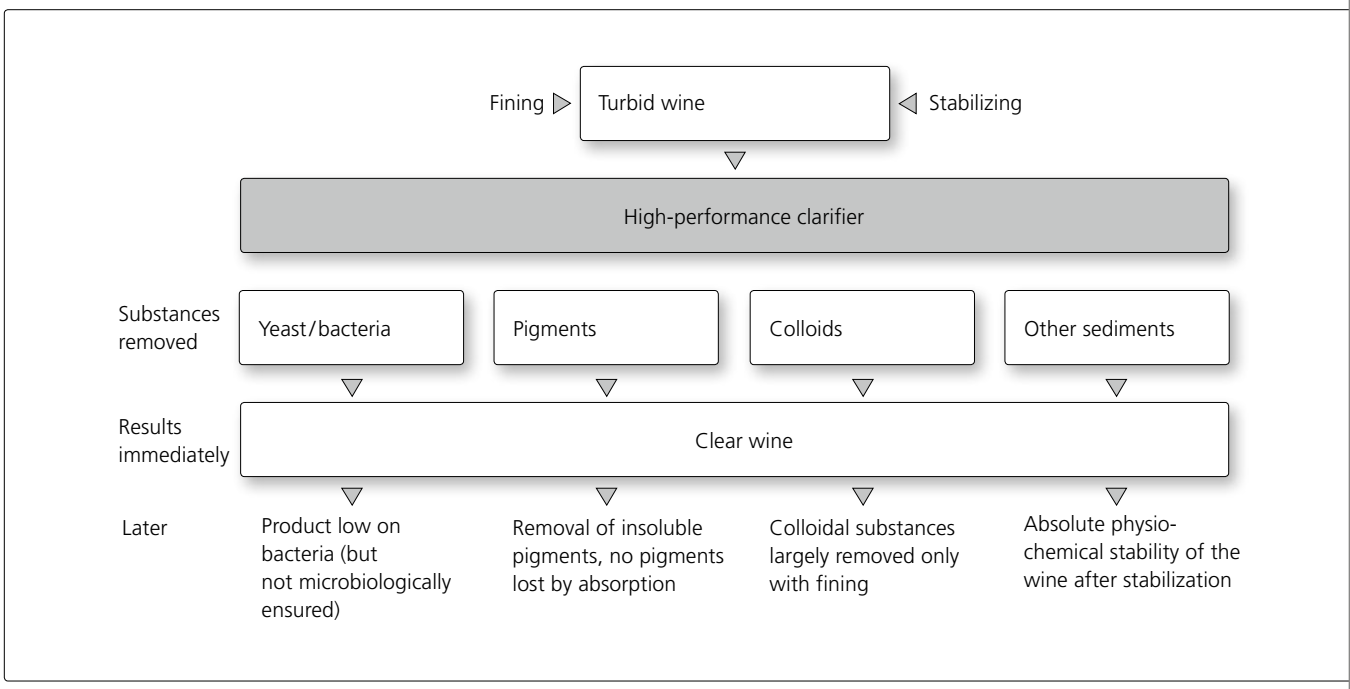

Results obtained when clarifying turbid wine in the centrifugal field of a High-performance clarifier.

Clarification of Still Wine for Sparkling Wine Production

Removal of residual yeast
Finished still wines (champagne stock) are used to produce sparkling wines. Some of these wines still contain residual yeast which is removed by selfcleaning clarifiers.

Removal of fining trub
After that, fining of the wine is necessary to bring about precipitation of protein and iron compounds.

Both clarifying stages, removal of yeast and fining agents, are carried out in accordance with the following diagram.

Advantages
- Savings in filter aids and increased filter life
- Separated fining agent is ready for disposal
- Easy cleaning by CIP

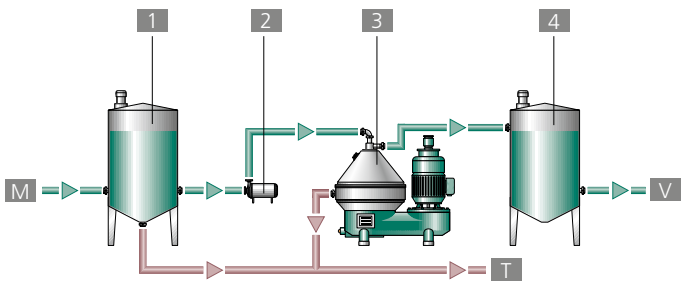

1 Wine or fining tank
2 Pump
3 Clarifier
4 Wine tank

M From fermentation tank (still wine)
T Lees processing
V To tank fermentation (sparkling wine)

Clarification of sparkling wine

GEA Westfalia Separator eco**plus**		
	Max. capacity * Removal of residual yeast	Max. capacity * Removal of fining agents
GSC 18 **	1500 l/h	1000 l/h
GSC 40 **	3000 l/h	2000 l/h
GSC 60 **	8000 l/h	4000 l/h
GSC 110	10,000 l/h	5000 l/h

* Capacities may vary according to still wine/turbid phase
** Machine with cast steel solids collector

GEA Westfalia Separator hy**vol**® clarifier		
	Max. capacity * Removal of residual yeast	Max. capacity * Removal of fining agents
GSE 30	4000 l/h	2000 l/h
GSE 50	7000 l/h	3000 l/h
GSE 75	8000 l/h	4000 l/h
GSE 100	10,000 l/h	5000 l/h
GSE 125	12,000 l/h	6000 l/h
GSE 180	16,000 l/h	9000 l/h
GSE 200	20,000 l/h	12,000 l/h
GSE 300	30,000 l/h	15,000 l/h

* Capacities may vary according to still wine/turbid phase

GEA Westfalia Separator hy**dry**® clarifier		
	Max. capacity * Removal of residual yeast	Max. capacity * Removal of fining agents
GSC 45	6000 l/h	3000 l/h
GSC 75	8000 l/h	4000 l/h
GSC 95	10,000 l/h	5000 l/h
GSC 150	16,000 l/h	8000 l/h
GSC 200	18,000 l/h	9000 l/h

* Capacities may vary according to still wine/turbid phase

Super clarifier	
	Max. capacity * Removal of residual yeast
GRA 160	10,000 l/h
GSA 500	28,000 l/h

* Capacities may vary according to still wine/turbid phase

Clarification of Sparkling Wine

With bulk tank processing clarification is carried out to produce a clear, yeast-free sparkling wine. The moment for the yeast to be separated from the raw sparkling wine is determined by process conditions, results of fermentation inspection, chemical and microbiological tests and the quality required of the sparkling wine.

Generally, clarification is carried out shortly before bottling.

Today, both bulk and bottle ("transvasement" process) fermented sparkling wines can be pre-clarified and polished in self-cleaning hydrohermetic design disc-bowl centrifuges.

Subsequent filtration with plate filters, with considerable savings in filter aids, produces clear, stable sparkling wines.

Advantages

- No loss of carbon dioxide, alcohol or bouquet substance
- Pre-filtration is eliminated, only final polishing by means of a plate filter necessary
- Processing free of air
- Easy cleaning by CIP

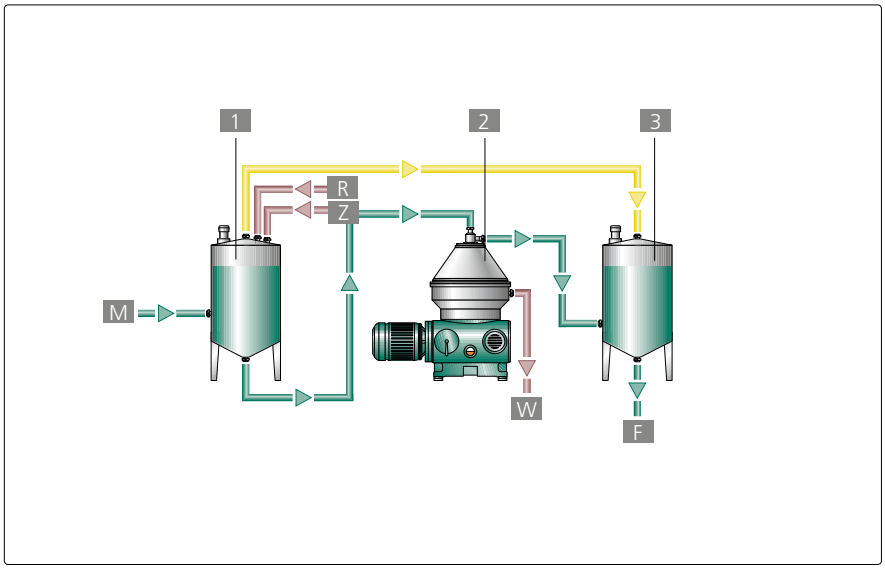

1 Pressurized fermentation tank
2 Clarifier, hydrohermetic design
3 Pressure tank

M Stabilized and polished still wine before the second alcoholic fermentation
R Pure yeast culture
W Lees
F To filtration
Z Sugar

Transvasement process with bottle fermentation

Champagne Production

The name "Champagne" is reserved exclusively for the French wine-growing Champagne region (the mountains surrounding Reims, Marne Valley, Côte des Blancs, L'Aube, L'Aisne). Champagne consists of ⅔ red and ⅓ white grapes.

The three types of approved grapes are:

- Pinot Noir, red grapes (pressed white)
- Pinot Meunier, red grapes (pressed white)
- Chardonnay Blanc, white grapes

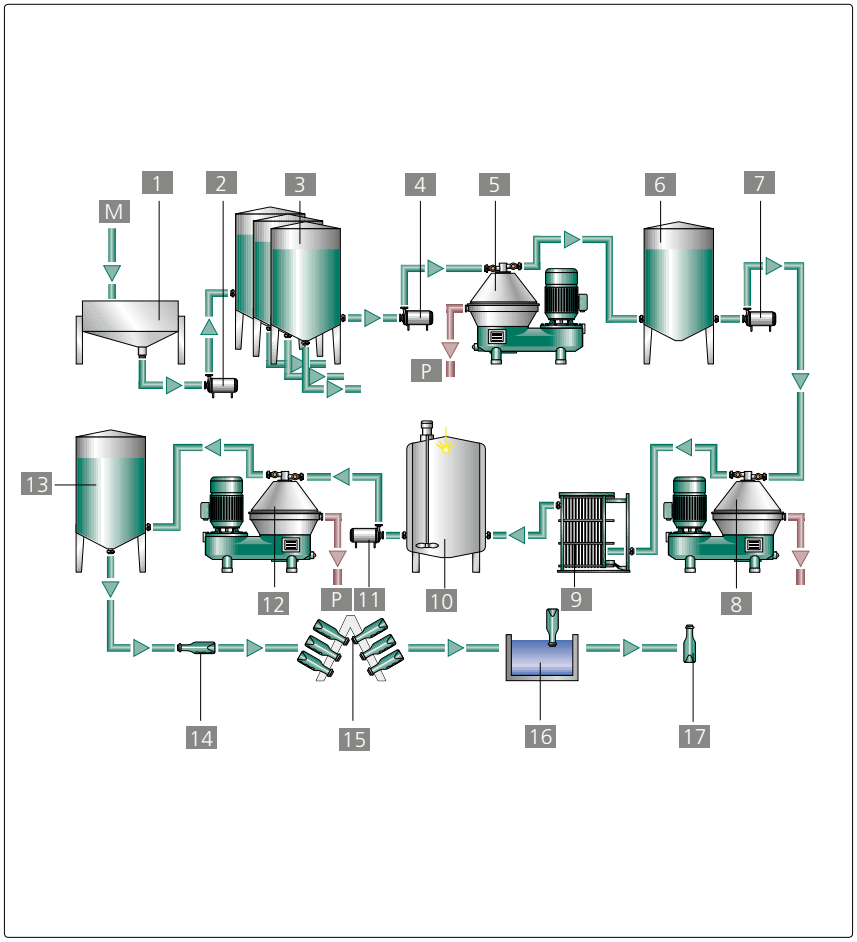

1 Press
2 Pump
3 Must tanks
4 Pump
5 Clarifier
6 Fermentation tank
7 Pump
8 Clarifier (to clarify still wine)
9 Cooling
10 Reaction tank (precipitation)
11 Pump
12 Clarifier (clarification)
13 Pressure tank
14 Addition of sugar and yeast
15 Bottle fermentation
16 Icing of bottle necks before yeast removal
17 Champagne

M Grape receiving point
P Solids

Clarification of still wine for champagne and sparkling wine

In the process shown on page 22 the same centrifuge can be used for pre-clarifying must and still wine.

Advantages of clarifying still wine with a clarifier

- Continuous operation
- Higher yield
- No intake of oxygen
- No impairment of flavour by filtering additives
- Production of typical still wines pure in colour
- No damage to the environment by used filtering additives

Advantages of primary must clarification with a clarifier

- Fast extraction of solids immediately after pressing
- Enhancement of quality
- Savings of tank space, labour and time compared to natural tank sedimentation
- Uniform fermentation of clarified must boosting the development of the wine

Tartrate Stabilization and Crystal Separation

One possibility of preventing tartrate precipitation (potassium hydrogen tartrate) in bottled wines is cooling over a period of 3 to 40 days.

With cooling, tartrate is precipitated and can be extracted by filtration. Only then is the wine bottled. This process is time and energy consuming as well as cost intensive.

The tartrate stabilization and extraction process offers a reliable and economic solution. This process combines reliability of a known and well-tried "contact process" with the advantages of centrifugal crystal separation. It can be used for stabilizing wine, sparkling wine and grape juice. Reaction time here is reduced to about 2 – 5 hours.

At first, the wine is cooled down to stabilization temperature. Next follows the addition of tartrate vaccination crystals. Intermediate storage of cooled and vaccinated wine follows in isolated tanks equipped with stirrers. The turbulence, generated according to the adjusted stirring intensity, keeps the contact tartrate floating during the whole reaction time and separation phase. After adequate retention time (stabilization phase), separation of tartrate by hydrocyclone and clarifier (separation phase) takes place.

Page 25 shows the corresponding process.

With this process tartrate is separated in two fractions:

- In hydrocyclones fractional extraction of tartrate crystals takes place as well as washing. The added contact tartrate is cleaned from residues and deposits and completely separated. Thus optimum conditions are given for frequent reusage of contact tartrate over several years (recycling).
- In clarifiers compact grained tartrate is extracted (as well as substances susceptible to freezing – mainly protein) and must be separated. It has no abrasive properties so that damage to the bowl is excluded.

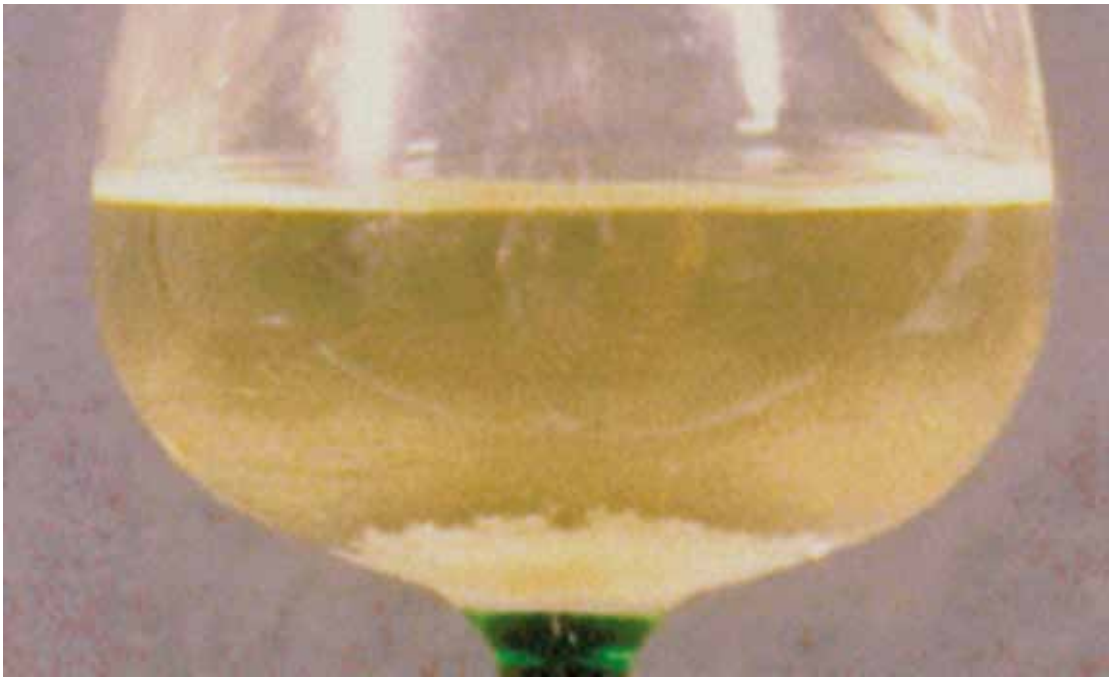

Unwanted crystal sedimentation in bottled wine

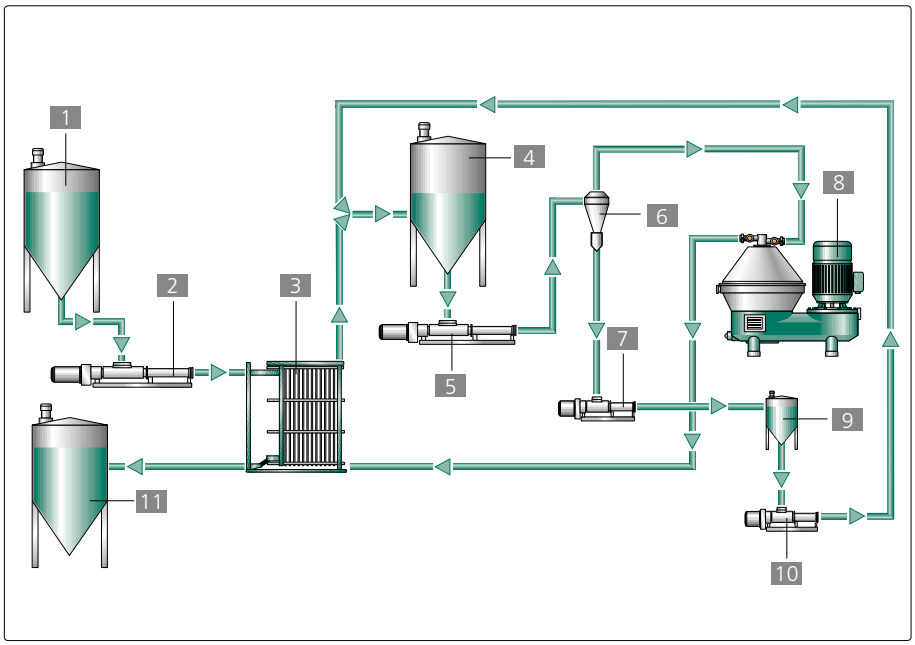

1 Tank
2 Pump
3 Cooler
4 Reaction tank
5 Pump
6 Hydrocyclone
7 Pump
8 Clarifier
9 Tartrate tank
10 Pump
11 Storage tank

Tartrate stabilization and separation process by the GEA Westfalia Separator Group

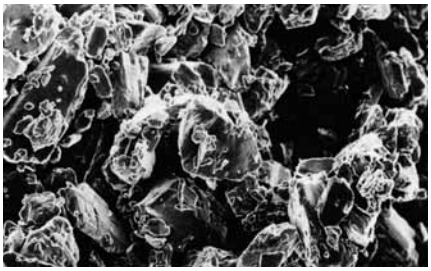

Electron-microscopical micrograph of new contact tartrate (vaccination crystals) – customary in trade. Particle size is between 20 and 50 µm. 300-times magnified.

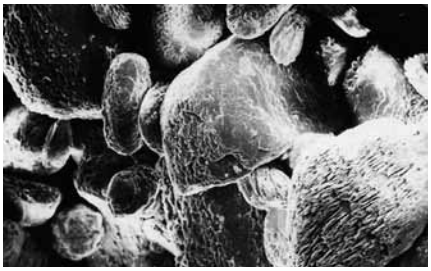

Electron-microscopical micrograph of contact tartrate after fourth re-usage in white wine stabilization; separation by hydrocyclone. 300-times magnified.

Electron-microscopical micrograph of contact tartrate after having used vaccination crystals for several months in red wine stabilization; separation by hydrocyclone. 300-times magnified.

Tartrate Crystals with Varying Usage Periods

The figures show micrographs of tartrate crystals after different usage times.

After their fourth re-usage (centre micrograph) their crystal surface develops a kind of "slate landscape". The crystals' active centres are clearly visible; they appear more frequently and are completely clean.

The micrograph on the right shows vaccination crystals after several months of usage in red wine stabilization. Surprisingly, the crystals here are round-shaped and have a clean surface. Moreover, contact tartrate recycled by hydrocyclones also loses its sharp edges and transforms into a globular shape in the course of time during continuous usage. At the same time it undergoes a continuous regeneration due to collection of surplus tartrate during the stabilization phase,

- Through the washing effect in hydrocyclones before the separation process
- Through mechanical influences like pumps, stirrers etc.

In comparison to new contact tartrate, characterized by large crystallization activity, this process of reusing vaccination crystals for several months leads to a visible growth of active centres coupled with clean surfaces.

High economic efficiency of the new tartrate stabilization and separation process is among others due to multiple application possibilities of the clarifier. It may also be used for classical clarification tasks in juice, wine and sparkling wine production.

Capacity range according to plant size is 1000 to 45,000 l/h.

Advantages of Tartrate Stabilization Process

- Continuous operation because of a semi-continuous process
- Variable throughput capacities
- Reduced space requirements
- Centrifuge can be applied universally even for must, wine and sparkling wine clarification
- High reusage capacity of recycled tartrate
- No further treatment by process technology required
- Easy operation because of high automation
- Flexible process (clarification of red, rosé and white wines, as well as sparkling wines and grape juices)
- Saving of energy
- Final product completely meets the market's high stability requirements
- The contact process skips the time-consuming contamination phase, as the wine or sparkling wine is vaccinated with certain vaccination crystals. Thus, the whole contact period becomes a very efficient stabilization time.

Cyclone station and separator in a German large-scale winery, used for tartrate separation, capacity up to 25,000 l/h.

Operating Principles and Constructional Features of Clarifiers

The accumulated know-how of several decades has enabled the GEA Westfalia Separator Group to adapt its centrifuges precisely to the exact needs of the wine industry. In the early days chamber bowl clarifiers were used in wineries. These were later replaced with self-cleaning clarifiers to satisfy the need for continuous operational processes.

Self-cleaning clarifiers

Clarifiers with self-cleaning bowls are used both by small and large wineries. They operate continuously without interruption. The optimum moment for solids discharge is initiated by the clarifier's photoelectric control system.

These clarifiers are equipped with a disc-type bowl and internally or externally operating sliding piston. The liquid is fast and gently clarified in the disc stack, whereby the solids flow outwards and collect in the sediment holding space. As soon as the optimum moment for ejection is reached, the mobile piston is hydraulically opened. The solids are instantly ejected at full bowl speed and the piston returns to the closed position. Clarified liquid is extracted by centripetal pumps foam free and under pressure. If the liquid should not come into contact with atmospheric air to prevent losses of SO_2, CO_2, and bouquet aroma, these clarifiers can be supplied in hydrohermetic (liquid seal) design.

Hydrohermetic design

In these clarifiers contact of the product with atmospheric air is prevented without the aid of mechanical seals by means of a centripetal pump, whereby, in addition, a stationary disc submerged in the rotating liquid creates a liquid seal. This not only prevents atmospheric contact of centrifuged product but, furthermore, loss of CO_2, SO_2, as well as aromatic substances.

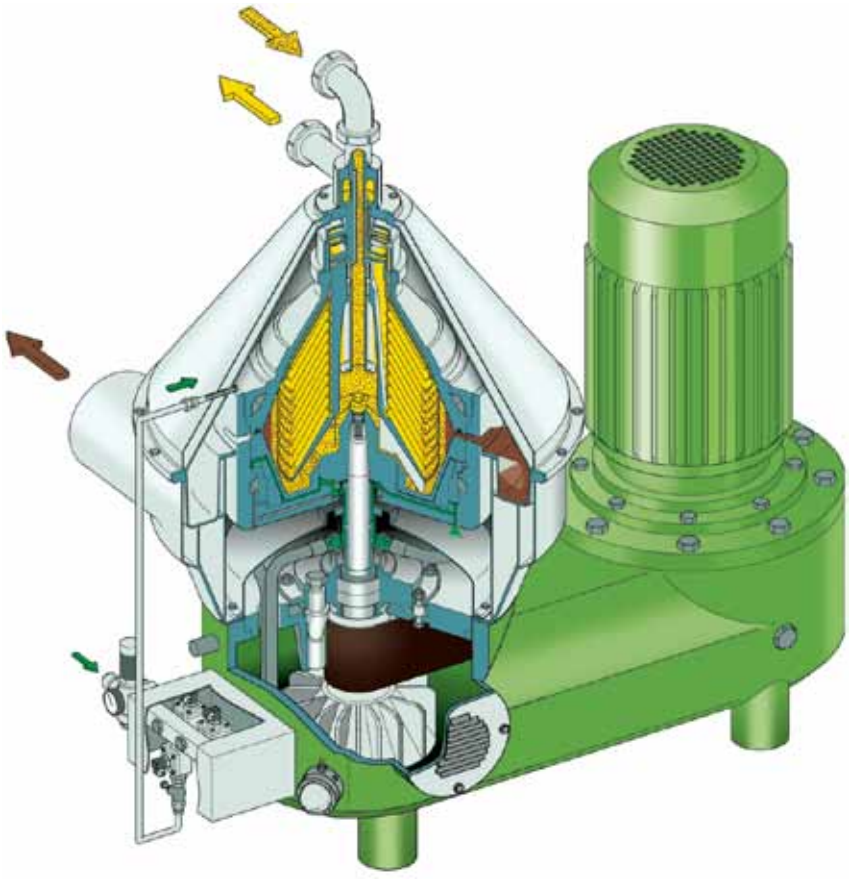

Clarifiers with integrated sound insulation

Besides efficient and economical operation, design measures for the improvement of environmental conditions are also important today. Greater attention has been devoted to the wishes of wine producers for a reduction of noise levels in the design of the latest types of clarifiers. By integrating sound insulation in the clarifier and closed product discharge as well as using new low-noise drive motors, noise levels have been considerably reduced.

The operating noise (sound pressure level) of these clarifiers is less than 78 dB (A). External sound insulation measures are not necessary.

GEA Westfalia Separator hydrostop **system for controlled bowl cleaning**

The new bowl hydraulic system (hydro**stop**) by the GEA Westfalia Separator Group ensures fast and accurate extraction of solids. Extracted quantities can be preselected during operation. Product feed is not interrupted. Solids are highly concentrated which prevents losses.

GEA Westfalia Separator hyvol**® and hy**dry**® machine generations cover the complete capacity demand**

With hy**vol®** and hy**dry®** two new clarifier families are presented. Both series perfectly and completely cover, each with optimum machine sizes, the total capacity demand in beverage and food industry. hy**vol®** and hy**dry®** clarifiers have been optimized according to customer benefit and their fast integration into individual operational processes. The basis of hy**vol®** is the provision of maximum effective capacity with given investment volume.

With hy**vol®**, the GEA Westfalia Separator Group presents a cleaning system for plunger valves. Using the hydohermetic feeder minimizes negative effects of transverse actions and guarantees optimum clarification efficiency. Clarification performance and product quality are subsequently at an optimum. Hydrohermetic sealing prevents product contamination with atmospheric air. This sealing combines optimum CIP capacity with maintenance freedom.

One last feature common to all hy**vol®** clarifiers is the extremely fast cleaning valves. They keep product loss during clarifier cleaning as small as possible.

With hy**dry®** clarifiers, development has concentrated on reaching the highest possible dry substance contents of centrifuged solids. Dry substance contents of 25 to 27 percent v/v are with these machines within standard tolerances due to the GEA Westfalia Separator hydro**stop** cleaning principle. The optimum dry substance concentration finds expression in very short amortization times, particularly when processing large volumes of liquid as in wine production. Product loss is extremely low. All hy**dry®** like hy**vol®** clarifiers are equipped with belt drive. They, moreover, excel with multifunctionality.

GEA Westfalia Separator hy**vol®** and hy**dry®** clarifiers have been optimized with regard to customer benefit and fast integration into individual operational processes.

Capacity factor results from:

- Bowl speed
- Disc angle
- Disc number
- Disc diameter

Clarifiers are geared to highest possible effective capacity. Optimization of capacity factor is limited.

Bowl speed depends on the approved stress limits for tools.

Disc angle, diameter, and number have to be geared to differing products.

With high solid substance input in the feed, for example must clarification, the effective capacity also depends on the size of the solids space and the possible cleaning frequency.

GEA Westfalia Separator ecoplus **clarifiers for economic wine production with low capacity range**

The GEA Westfalia Separator Group has developed a new clarifier generation for low capacities.

The machine series, sold under the name eco**plus** – economy and more – present low-cost alternatives to existing solid-liquid separation systems in wine production.

The clarifier types GSC 15 and GSC 25 have been optimized particularly for must and wine clarification. These machines, developed according to the new standardization concept, can be used for must clarification within the range of 1000 l/h to 3000 l/h and for wine clarification from 3000 l/h to 7000 l/h. Their basic equipment contains a lot of the features having made the GEA Westfalia Separator Group clarifiers indispensable in wine production. Part of the new development concept is the traditional GEA Westfalia Separator hydro**stop** system. With this system the centrifuged turbid phase is discharged from the machine in a particularly dry state. The advantage for wine production is maximum wine yield. No other clarifier system can be employed in such a value adding way. A further highlight is hydro-hermetic sealing which prevents product contact with atmospheric air and thus oxygen intake.

Clarifier generation for low capacity range: GSC 25 – particularly for must and wine clarification.

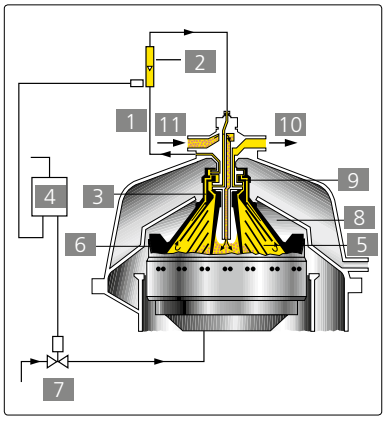

Automatic control by monitoring the sediment holding space of the bowl with sensing liquid

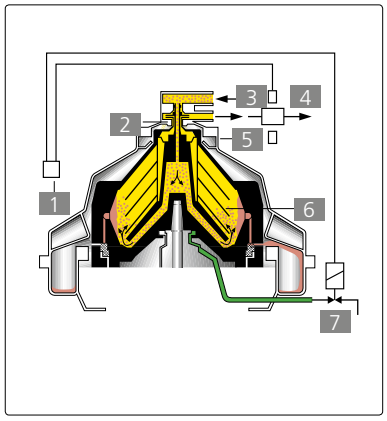

Automatic control by photo-electric cell in discharge line

1 Proximity switch
2 Flow meter
3 Sensing liquid pump
4 Control unit
5 Discs
6 Inlet of sensing liquid over separating disc
7 Operating water valve
8 Clarifying disc for sensing liquid
9 Centripetal pump
10 Discharge of clarified liquid
11 Feed

1 Control unit
2 Discharge pump
3 Feed
4 Photo-electric cell
5 Discharge of clarified liquid
6 Discs
7 Operating water valve

Control Systems for Fully Automatic Operations

Different clarifier control systems are available to achieve uniform low residual moisture content with fluctuating solids concentrations and varying product throughput. These control systems ensure that solids are ejected at the optimum moment. Clarifying efficiency falls if the sediment holding space of the centrifuge overfills. If it is not optimally filled, ejection losses increase and effective throughput falls because of unnecessarily increased ejection frequency.

Scanning of sediment holding space

With this system the optimum level of solids in the sediment holding space is monitored by means of sensing liquid. Interruption of sensing liquid flow when the optimum level of solids is reached causes an impulse to be sent to the control unit to initiate ejection. High concentration of solids is attainable with this system which is also suitable for processing opaque liquids or fluctuating solids content.

Photo-electric control

This system monitors the clarified liquid phase. A control device (e.g. light barrier) in the discharge line registers turbidity and initiates the automatic bowl ejection programme sequence when a preset turbidity threshold value is reached or exceeded. This control system is employed for feedstocks which are translucent and have a fluctuating solids content or varying product flow. It ensures that the degree of clarification of the discharging liquid remains constant.

The control units used in conjunction with these control systems can be set, depending on the solids content, for

- Partial or total ejection
- Combination of partial and total ejection
- Flush ejection after each total ejection

Automatic operation of self-cleaning clarifiers and optimum usage of throughput capacity are achieved by means of these control systems which have been designed closely based on the know-how of the wine industry.

High-Performance Clarifiers

These clarifiers can be supplied in hermetic or hydro-hermetic design. Due to the use of new high-tensile materials, centrifugal forces can be achieved up to 15,000 times the acceleration due to gravity. Thus solid particles down to sizes in the order of 0.5 µm can be centrifugally removed.

Operating principles
The feedstock flows into the bowl through the feed inlet and is clarified in the disc stack. Clarified liquid is transported by centripetal pump foam free and under pressure to the outlet.

Separated solids collect in the sediment holding space (5) and are ejected at periodic intervals through ports (6). Solids ejection is initiated by the control unit. The operating water, which does not come into contact with the product, is only required during ejection.

Rotary Brush Strainers and Hydrocyclones in Wineries

Pre-separation of coarse and erosive solids
The increasing mechanisation of wine harvesting and processing also implicates problems. The must to be processed contains at a larger scale erosive and coarse solids. These impurities must be removed before clarification to assure continuous processing and avoid erosion and other faults on the clarifier.

Depending on the character of the must either
- Rotary brush strainers or
- Hydrocyclones

can be used.

Rotary brush strainers should, in any event, be installed upstream for removal of components such as stems, seeds and skins. This reduces the load on the clarifier. Rotary brush strainers are also particularly suitable for screening high-temperature-short-time (HTST) treated mash after pressing. This treatment prevents blockages and deposits in the plate heat exchanger.

Hydrocyclones can be gainfully installed when, for example, the must contains excessive amounts of sand due to mechanical harvesting of the grapes.

The correct arrangement of the installation is important when both devices are used. Rotary brush strainers must always be installed upstream in order to eliminate blockages in the hydrocyclone.

The optimum position for both units is between press and must tank. Thus the effects of clarifier ejections and solids fluctuations are eliminated. If local conditions or use of mobile plants prevent choice of this location, then rotary brush strainers and hydrocyclones should be installed directly before the clarifier.

Rotary brush strainers
Rotary brush strainers operate continuously. Because of their closed design, air is excluded. Raw must is fed into the strainer through the inlet. Solids collected on the inside of the cylindrical, perforated strainer insert are pushed down into the conical sediment holding space by rotating scrapers. They can be discharged periodically through the solids outlet. A tangentially arranged flushing connection serves for cleaning the strainer. Suitable rotary brush strainers are available in various sizes for all self-cleaning clarifiers.

Advantages

- Reduced load on clarifier
- Closed strainer design excludes air
- Installation into pressurized system possible

Hydrocyclones

Hydrocyclones are centrifugal separators which find application, among other things, for separation and classification of solids suspended in liquids.

In the wine industry they are used for desanding the must in order to protect the valuable clarifier bowl from wear as well as for tartrate separation.

Because of their closed design (sealing of lower part by so-called grit pot), O_2 intake and must losses are avoided. Sand-containing must enters the hydrocyclone at the required pressure “p” through the inlet.

Sand particles pass through the apex nozzle into the grit pot. The de-sanded must leaves the hydrocyclone through the outlet. Sand particles are discharged discontinuously through the valve. The opening process can be carried out manually or automatically with the aid of a timer.

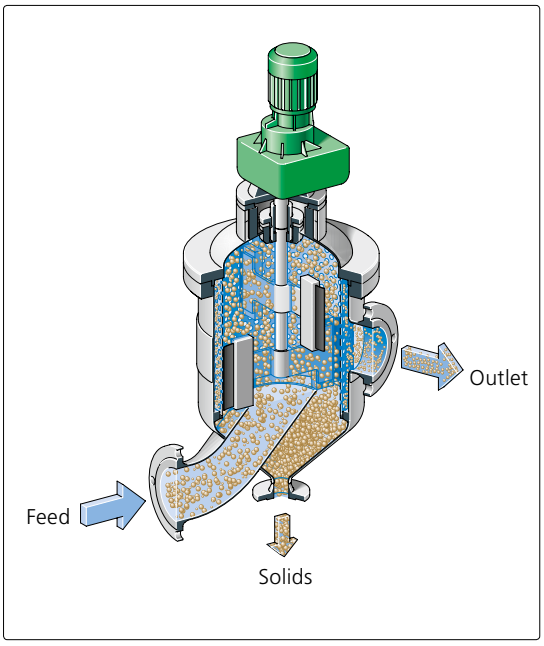

Rotary brush strainer

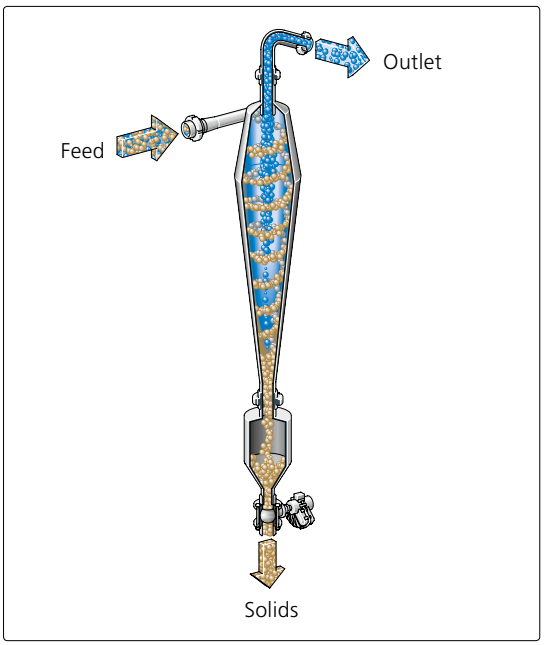

Hydrocyclone

Decanters in the Wine Industry

Characteristics

Decanters are solids oriented centrifuges with a solid-wall bowl. A conveyor screw (scroll) conveys solids to the outlet ports, through which they are continuously discharged. Decanters are mainly used for clarification of liquids with high solids content. Slightly varying solids content in the product feed has little effect on the degree of clarification or separation.

Decanters find application in large wineries for:

- Clarification of must
- Concentration of sediment from must tanks
- Pre-clarification of lees from fermentation tanks
- Concentration of fining agents

Using decanters for these applications ensures optmum yield of must and wine, as, for example, the continuously discharged solids are ready for disposal. A further important factor is savings in filter aids.

Decanters in various designs:

- Decanters with discharge of clarified liquid under pressure. With this design clarified liquid is discharged foam free and under pressure by a paring disc (centripetal pump)
- Decanters with gravity discharge of clarified liquid. Clarified liquid is discharged into a balance tank or other processing units
- Decanters in gas-tight design. These decanters are used when oxidation of the incoming product must be avoided. Connections for inert gas blanketing are provided with these types

Advantages of decanters

- High yield
- Continuous operation. Processing times are practically unlimited (round-the-clock operation).
- Automatic operation and, thereby, reduced cost of labour
- Discharged solids ready for disposal
- Savings in filter aids
- Versatile processing possibilities

Capacities data

Capacities indicated in this brochure for the different models are effective throughput capacities. They differ from comparison capacities which are design related.

Comparison capacity

Comparison capacity refers to the different decanters produced by the GEA Westfalia Separator Group and is lower than the max. throughput capacity.

Effective capacity

Effective capacity is product and process related. It depends on clarifiability of feed mixture, concentration of solids in the feed, permissible residual moisture content of discharged solids, and on the solids content of clarified liquid. Decanters can be largely adapted to these conditions and requirements.

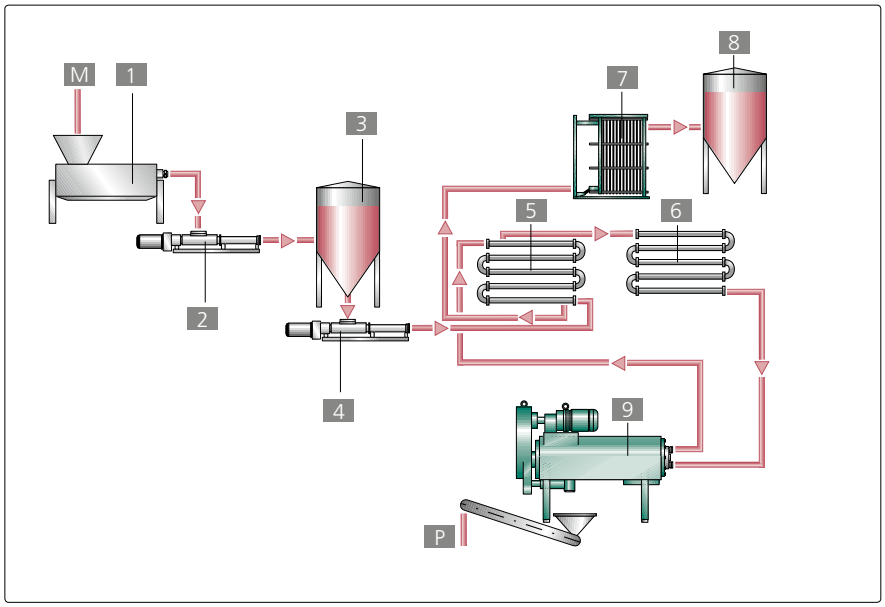

1 Stemmer
2 Pump
3 Intermediate tank
4 Pump
5 Tubular heat exchanger
6 Heater with holding section
7 Plate heat exchanger
8 Tank
9 Decanter

M Grapes
P Solids

Continuous juicing of heated-mash red grapes

GEA Westfalia Separator **vinex** – Continuous Grape Juicing

In manufacturing heated-mash red wines, red grape mash is slowly agitated, e.g. by a horizontal stirrer, to ensure homogenous feed.

The mash is continuously short-time heated to 80 – 85 °C for 2 – 4 minutes and then fed directly and immediately to the decanter.

A further process is the pressing of fermented-mash red grapes, which are also kept in a homogenous state in the fermentation tank by slowly rotating, large, horizontal stirrers. When the desired degree of fermentation has been reached, this mash is continuously juiced in the decanter. Almost the entire yeast is also extracted in the decanter and the downstream clarifying stage can, therefore, be avoided or at least heavily reduced.

Continuous juicing of red grapes after a Thermo-Flash installation

Another process is the juicing of white grape mash which is also kept in a homogenous state in the mash tank by slowly rotating, large, horizontal stirrers. The mash is pressed continuously, directly, and without long dwell times in the decanter.

An additional pre-treatment process extending beyond stemming to opening the grapes, e.g. by additional crushing, is unnecessary when juicing is conducted in a decanter. The grapes are sufficiently opened by the de-pipping process for gentle, rapid and continuous juicing in the decanter.

The colour and taste of the juice which has been extracted with centrifugal force are optimum. The low level of residual turbidity means that the post-treatment by means of clarification which has previously been necessary is now superfluous, and the bitter grape seeds are not damaged.

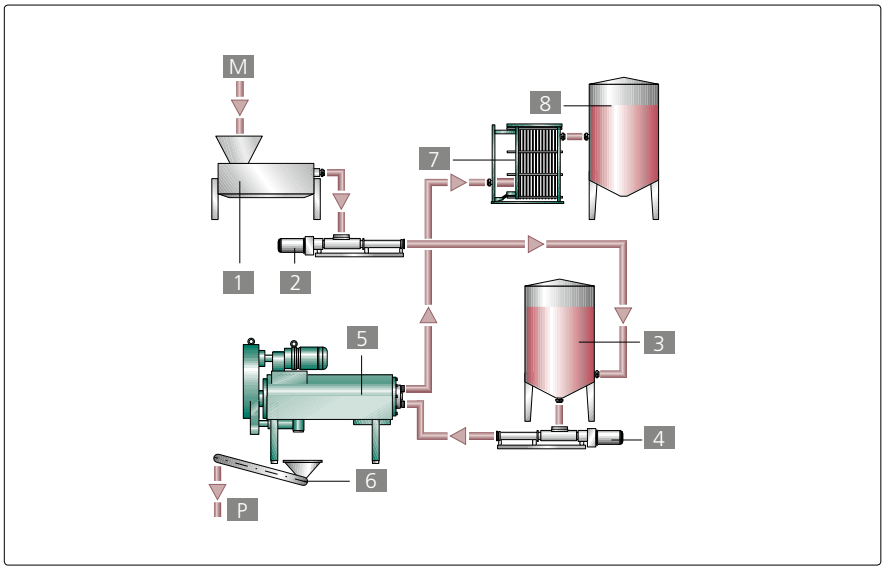

1 Stemmer
2 Pump
3 Mash tank
4 Pump
5 Decanter
6 Extraction of solids
7 Plate heat exchanger
8 Tank

M Grapes
P Solids

Continuous juicing of fermented-mash grapes

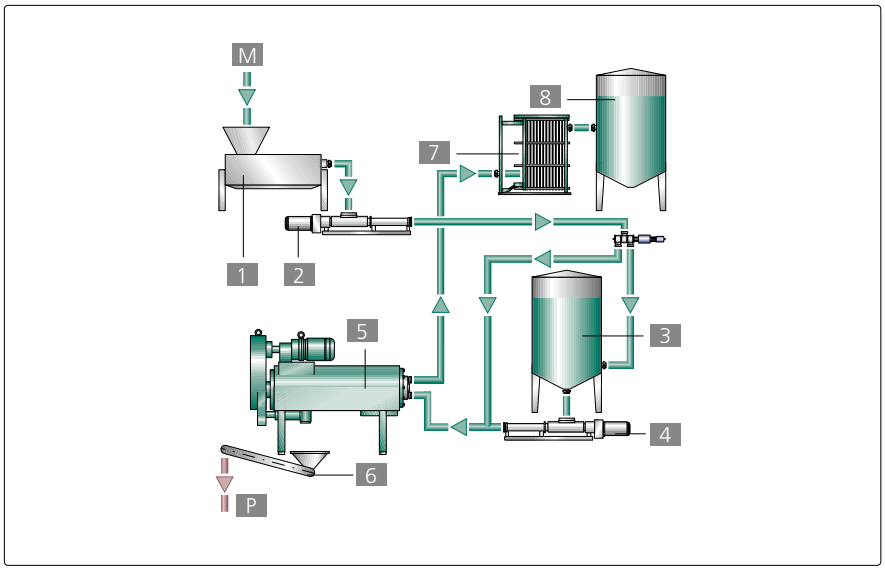

1 Stemmer
2 Pump
3 Mash tank
4 Pump
5 Decanter
6 Conveyor belt
7 Plate heat exchanger
8 Must tank

M Grapes
P Solids

Continuous juicing of white grapes

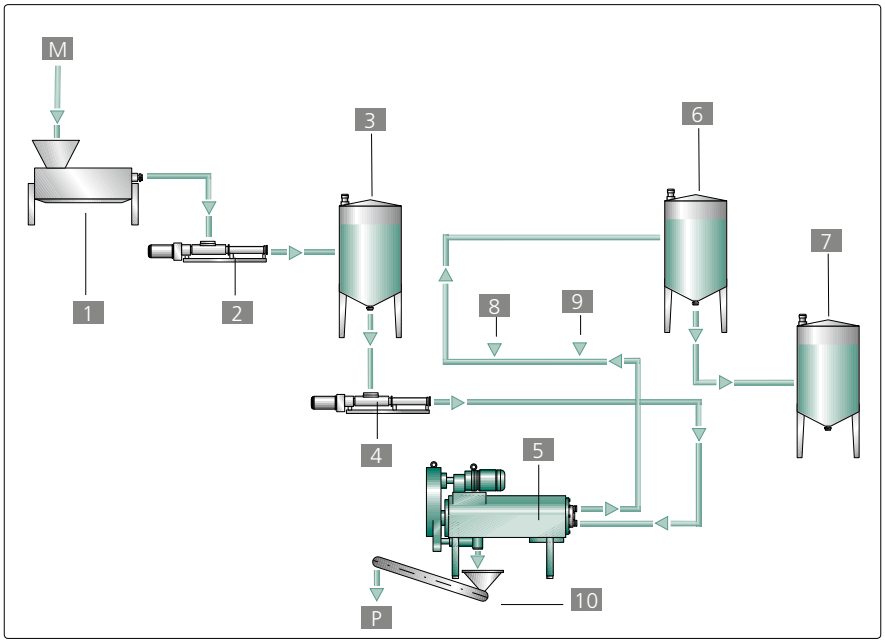

1 Stemmer
2 Pump
3 Mash tank
4 Pump
5 Decanter
6 Retention tank
7 Fermentation tank
8 Air/nitrogen addition
9 Gelatine addition
10 Conveyor belt

M Grapes
P Solids

Continuous juicing of white grapes with flotation

Type	Red mash-heated/ mash-fermented	White depending on the condition of the grapes
GCE 205-01	2 – 3 t/h	1 t/h
GCE 305-01	4 t/h	2 – 3 t/h
gMaster CF 3000	6 t/h	3 – 4 t/h
gMaster CF 4000	7 – 8 t/h	4 – 5 t/h
GCE 501-01	10 t/h	5 – 6 t/h
gMaster CF 6000	20 t/h	11 – 12 t/h
gMaster CF 7000	28 t/h	15 – 16 t/h

Rapid and gentle

The experts all agree. In terms of taste and quality, decanter red wines are exactly the same as wines produced with presses. The analytical results prefer decanter wines, and taste tests likewise. And the process also results in time savings. This is because the GEA Westfalia Separator **vinex** process means that it is no longer necessary for the mash to be allowed to stand for several hours.

Even the most modern press systems are not able to avoid problems such as inhomogeneous juice quality, complicated logistics due to the need for pre- and post-stacking of the mash, less than perfect hygiene and significant quantities of lees in the juice. It is not surprising that the new **vinex** process has been received extremely enthusiastically.

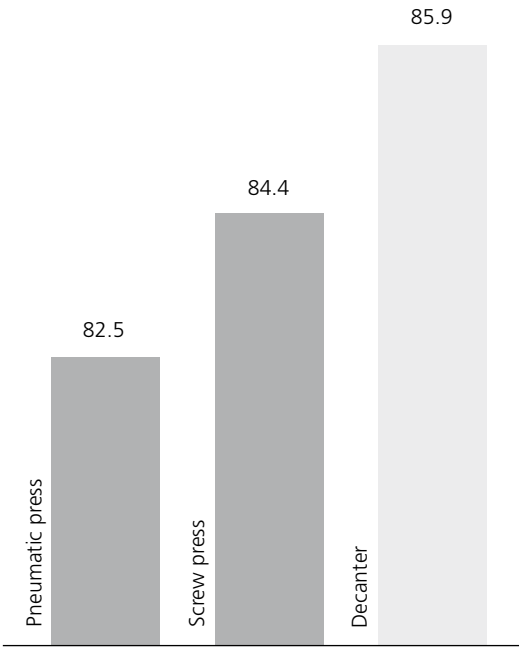

Red wine
Yield comparison (%)
Press and GEA Westfalia Separator **vinex** decanter

Juice extraction conventional	Juice extraction with decanter	Benefits
Stemmer	Stemmer	
Agitator tanks	Agitator tanks	
Heating	Heating	
Mash tanks	Decanter	Continuous process
Press	Option: Clarification	No buffer tanks, mash tanks
Clarification		Multifunctional
Fermentation	Fermentation	

10 Good Reasons

1. Gentle process
The use of centrifugal force means that the process of juicing in the GEA Westfalia Separator **vinex** method is extremely gentle.

2. Continuous method of operation
The **vinex** process permits a continuous method of operation in an enclosed system. Unwanted oxidation can be avoided in this way.

3. Top quality wines
Tannin agent and potassium content are indications of the mechanical strain imposed on the mash. With decanter wines, these parameters are identical and, in part, lower compared with wines produced with the press. The extraction time in a decanter is much shorter. This aspect minimizes enzyme action and changes in mash constituents and quality is improved. The microbe load is also reduced due to the rapid separation of mash into juice and pomace.

4. High yield
The yield can be boosted compared with the traditional method.

5. Uniform must quality
The juicing process involving decanters guarantees a uniform juice quality. Even very small batches can be processed in a decanter without any problems.

6. Minimal residual yeast
In mash-fermented red wine processing, almost the entire yeast is removed with the decanter method. Under optimum conditions therefore, secondary clarification is not necessary or can at least be carried out with lower levels of load.

7. Extremly simple cleaning
The compact enclosed system means that decanters are easy to clean. This saves time and reduces the strain imposed on the environment.

8. Flexible and reliable
Decanters can be used in a flexible manner for processing various products. The optimum quantity of trub in the juice can be adjusted as required.

9. Simple and space-saving
The decanters feature a compact and space-saving design. Installation is simple, and the space requirement is low.

10. Mobile applications
The compact design means that mobile application of the decanter is possible. It can for instance be hired out to external operations.

Clarification of Must from Screw Press / Tank Press

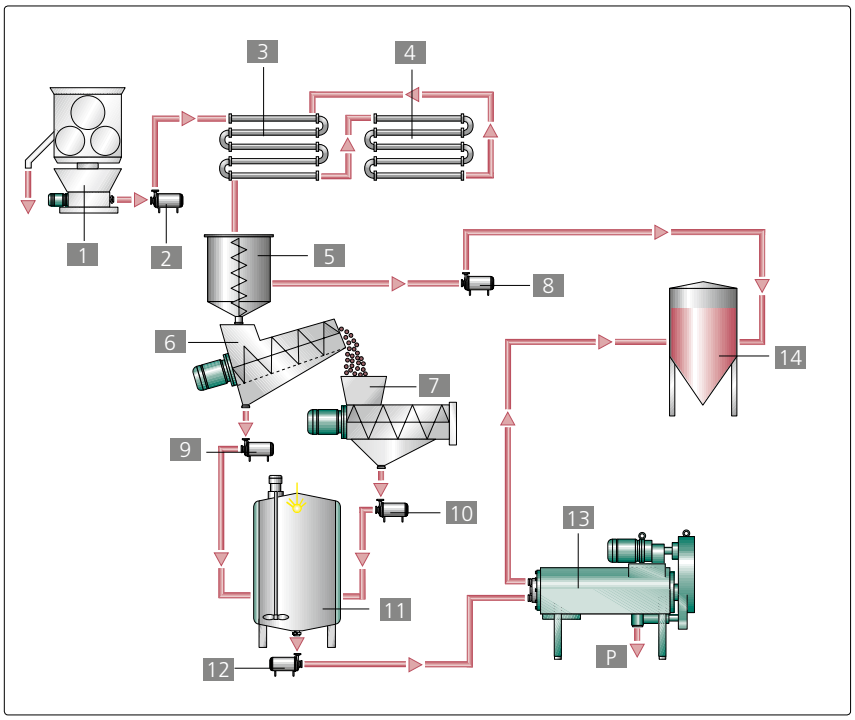

1 Stemmer
2 Pump
3 Heat exchanger
4 Heater with holding section
5 Drainer tank
6 Pre-juicer
7 Screw press
8 Pump
9 Pump
10 Pump
11 Must collecting tank
12 Pump
13 Decanter
14 Fermentation tank

P Solids

Red wine production

This method of operation conforms to Californian conditions (USA). Pre-clarification of must leaving the drainer tank is not necessary as the solids content is only about 1 percent by vol. This "free-run" must is fed without pre-clarification into the fermentation tank. Depending on the holding time in the drainer tank, the total volume of must recovered by this static method amounts to 50 – 70 percent. The must recovered from the continuous pre-juicer and screw press normally has a solids content of 8 – 15 percent by vol. This highly turbid must is reduced to approx. 3 percent by vol. by means of a decanter and fed to the drainer must in the fermentation tank.

Advantages

- Fully continuous processing
- Solids collect ready for disposal
- No filters required for sediment removal

Type	Max. effective capacity
GCE 205-01	3500 l/h
GCE 305-01	7500 l/h
gMaster CF 3000	9500 l/h
gMaster CF 4000	13,000 l/h
GCA 501-01	15,000 l/h
gMaster CF 6000	30,000 l/h
gMaster CF 7000	42,000 l/h
GCE 755	45,000 l/h

Alternative process for white wine

In this process the three must fractions obtained when recovering the must, the "free-run" must, must from the pre-juicer and pressed must from the screw press are fed into a common buffer tank. After a certain time allowed for sedimentation, the supernatant fairly clear must is fed with the aid of a float suction device to the clarifier for clarification. The concentrated must and sediment in the lower part of the tank is fed to the decanter. The two clear phases from clarifier and decanter are then fed into the fermentation tank and fermented.

Effective capacities

Clarifiers:

See "Must Clarification", page 8

Decanters:

See "Concentration of Lees from Must Tanks", page 45

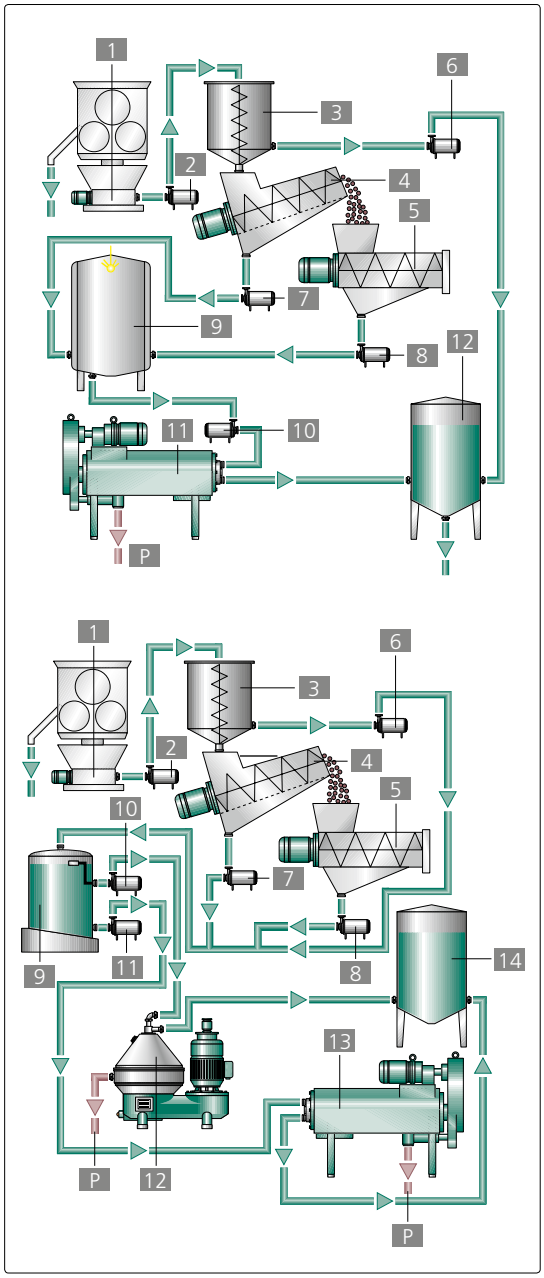

1 Stemmer
2 Pump
3 Drainer tank
4 Pre-juicer
5 Screw press
6 Pump
7 Pump
8 Pump
9 Must collecting tank
10 Pump
11 Decanter
12 Fermentation tank

P Solids

1 Stemmer
2 Pump
3 Drainer tank
4 Pre-juicer
5 Screw press
6 Pump
7 Pump
8 Pump
9 Must collecting tank
10 Pump
11 Pump
12 Clarifier
13 Decanter
14 Fermentation tank

P Solids

White wine production

Concentration of Sediment from Must Tanks

The method of operation conforms to European conditions.

This operational step deals with:

- Sediment from must tanks
- Solids discharged from clarifiers
- Floating cap from clarified must tank
- Must containing tannin from second postpressing stage from screw press

Optimum decanter use is possible when the last two high tannin containing juices are mixed with the first three protein containing must in the sediment collecting tank. Flocculation takes place and the coarse flaked solids can be easily separated out in the decanter. With exclusive use of screw presses the sediment, without prior mixing for flocculation, can be processed in the decanter with the same separating efficiency.

Advantages

- Considerable increase in downstream filter capacity (e.g. vacuum filter)
- Immediate processing of resulting sediment. Retention time of sediment in collecting tank is obsolete. Must quality remains
- Savings in filter aids
- Solids collect ready for disposal

These capacities are obtained when fresh sediment is processed. The solids content of 25 percent by vol. in the feed is reduced to 1 – 3 percent by vol. in the discharge. It is important for the sediment obtained to be fresh and not partly fermented. Partly fermented must sediment will greatly reduce clarifying efficiency of the decanter due to formation of carbonic acid (flotation effect of sediment). Compared to untreated must, sediment from enzymatically treated must can be clarified with up to double the efficiency.

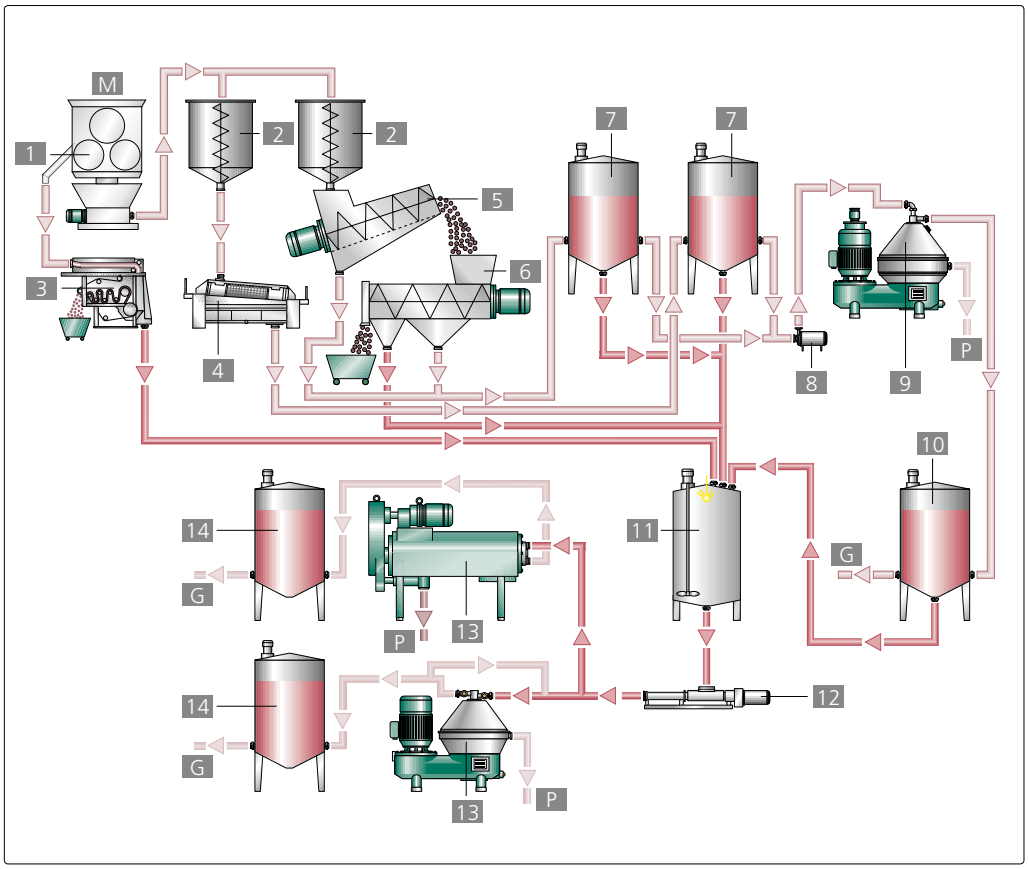

1 Stemmer
2 Pre-juicing
3 Continuous band press
4 Discontinuous tank press
5 Pre-juicer
6 Screw press
7 Must tanks
8 Pump
9 Clarifier
10 Must tank
11 Lees collecting tank
12 Pump
13 Decanter, alternatively clarifier, type GSC
14 Intermediate tank

M Grapes
G To fermentation
P Solids

Concentration of sediment from must tanks

GEA Westfalia Separator ecoplus		GEA Westfalia Separator hydry® clarifiers	
	Max. capacity *		Max. capacity *
GSC 18 **	400 l/h	GSC 45	1500 l/h
GSC 40 **	800 l/h	GSC 75	2000 l/h
GSC 60 **	2000 l/h	GSC 95	3000 l/h
GSC 110	3000 l/h	GSC 150	4000 l/h
		GSC 200	5000 l/h

* Capacities may vary according to sediment
** Machine with cast steel solids collector

Decanter	
	Max. capacity *
GCE 205	1500 l/h
GCE 305	2000 l/h
gMaster CF 3000	2500 l/h
gMaster CF 4000	3500 l/h
gMaster CF 6000	8000 l/h
gMaster CF 7000	10,000 l/h

* Capacities may vary according to must

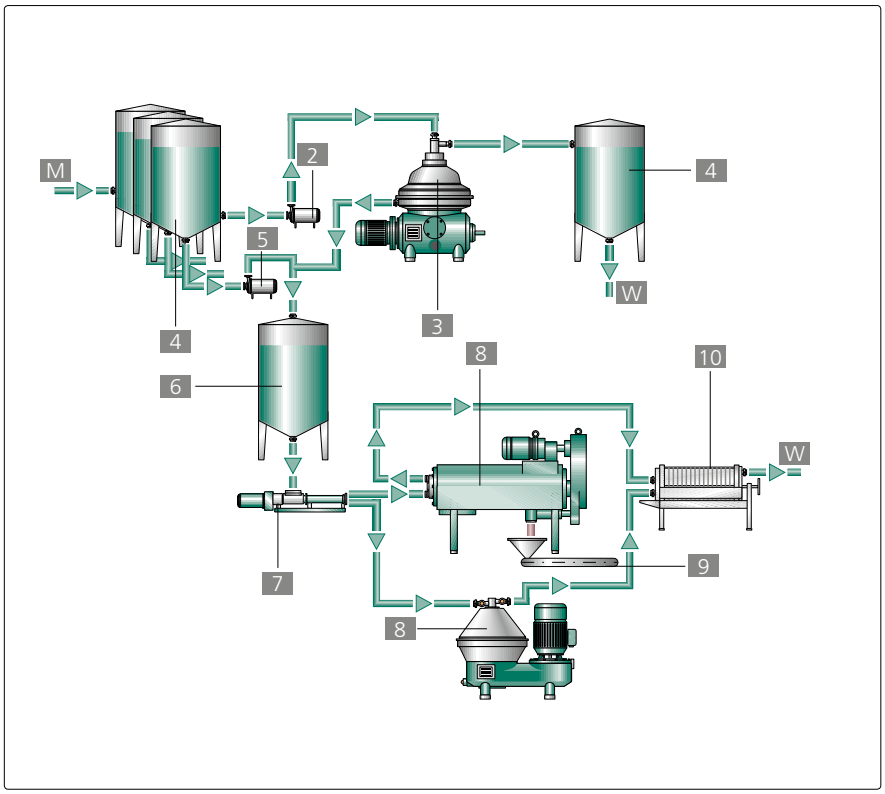

1 Fermentation tanks
2 Pump
3 Clarifier
4 Wine tank
5 Pump
6 Sediment collecting tank
7 Pump
8 Decanter / alternatively clarifier
9 Solids for separation
10 Filtration

M Must
W To further processing

Pre-clarification of yeast deposites from fermentation tanks

Pre-clarification of Yeast from Fermentation Tanks

Although sometimes only about 50 percent of the solids can be separated out at this clarifying stage, this step is important for efficient operation of the downstream filter (e.g. rotary vacuum filter). At this stage it is most important that the yeast to be processed is still in a very fresh condition. If the yeast is already in the early stages of autolysis, clarifying efficiency of the decanter will fall drastically (the yeast will become slimy).

GEA Westfalia Separator eco**plus**		GEA Westfalia Separator hy**dry**® clarifiers	
	Max. capacity *		Max. capacity *
GSC 18 **	200 l/h	GSC 20	500 l/h
GSC 40 **	400 l/h	GSC 45	1000 l/h
GSC 60 **	800 l/h	GSC 75	2000 l/h
GSC 110	2500 l/h	GSC 95	2500 l/h
		GSC 150	4000 l/h
		GSC 250	4500 l/h

* Machine with cast steel solids collector
** Capacities may vary according to tank bottoms

Decanter	
	Max. capacity *
GCE 205	300 l/h
GCE 305	500 l/h
gMaster CF 3000	900 l/h
gMaster CF 4000	1300 l/h
gMaster CF 6000	3000 l/h
gMaster CF 7000	4000 l/h
GCE 755	4000 l/h

* Capacities may vary according to must

Process for more Efficient Clarification of Must Sediment / Floating Trub / Yeast Lees

With this process, the efficiency of the clarification of recovered must / wine from must trub or wine lees in the decanter is improved through the continuous addition of fining agents such as gelatine directly into the decanter bowl at the same time as separation of the sediment / lees and fining trub. As such, improved performance in the decanter can be achieved with improved clarification of < 1 vol. percent solids in the discharge.

Must trub / yeast lees can therefore be processed quickly and promptly.

The must trub / yeast trub is separated with a high yield and the solid is delivered with dry substances of around > 40 percent DS.

Concentration of Trub after Fining

This process shows the use of the decanter in the production of vermouth. Activated carbon is mainly used as fining agent to brighten the wine. The decanter processes a feed capacity of 1500 l / h with a solids content of 50 percent by vol. The solids content in the discharge is reduced to 2 – 4 percent by vol..

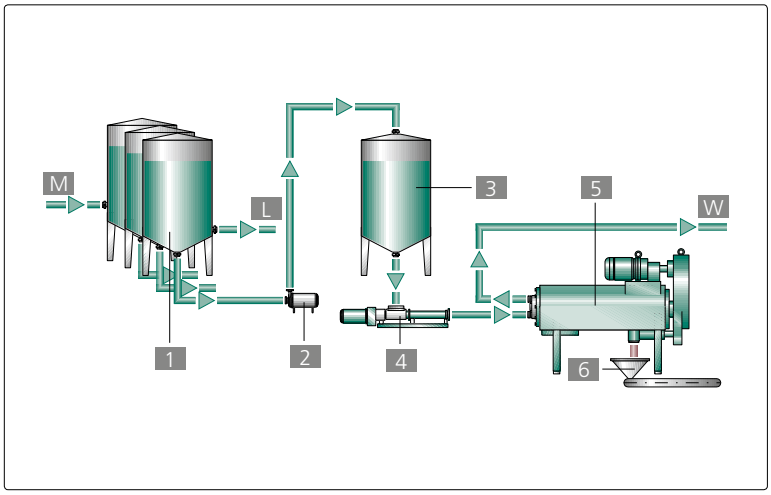

1 Fining tank
2 Pump
3 Lees collecting tank
4 Pump
5 Decanter
6 Conveyor belt (solids ready for disposal)

M From wine tank
L To storage tank
W Product for further processing

Clarification of Thin Sludge from Waste Water Treatment Plant

Due to more stringent environmental regulations, industrial waste water may no longer be loaded at will with organic matter. For this reason sediment content should be kept as low as possible. Moreover, fining agent and filtration residue should be recovered in a condition suitable for disposal.

Decanters can be used for dewatering thin sludge. In many cases addition of polymer flocculants is necessary into clarification section of the machine. Under unfavourable conditions further treatment (e.g. addition of calcium hydroxide) may be necessary to obtain solids suitable for disposal.

Decanter	
	Max. effective capacity *
UCD 305	5 – 9 m³/h
UCF 3000	8 – 14 m³/h
UCA 501	15 – 30 m³/h
UCF 6000	23 – 46 m³/h
UCE 755	80 – 120 m³/h

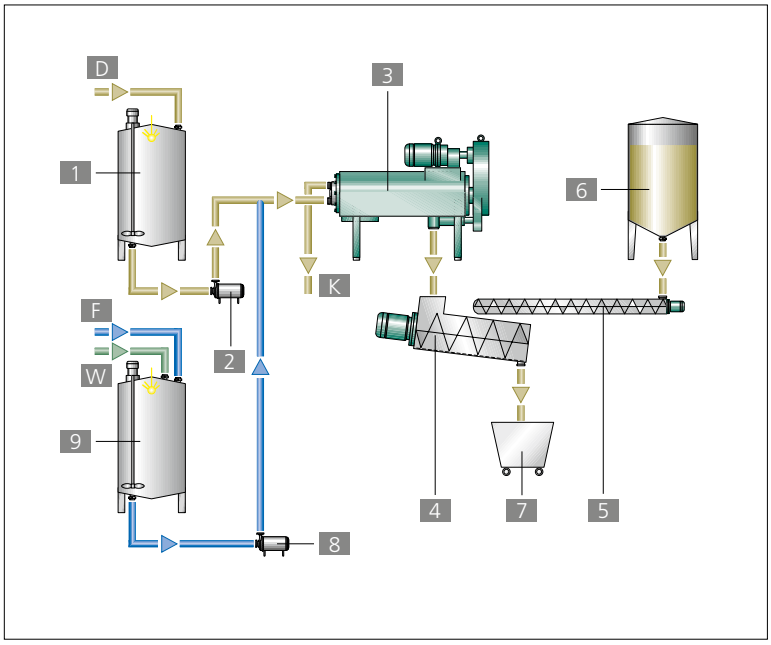

1 Collecting tank
2 Pump
3 Decanter
4 Mixer
5 Metering screw
6 Lime tank
7 Container
8 Pump
9 Metering tank

F Flocculant
W Water
K Back to clarification plant
D Thin sludge from waste water treatment plant

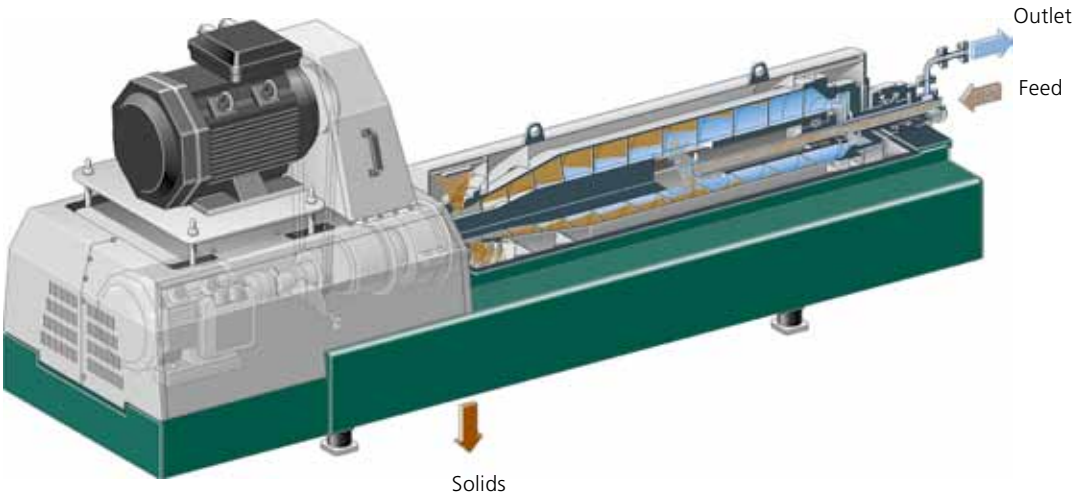

Operating Principles and Constructional Features of Decanters

When clarifier operation is no longer feasible due to high proportions of solids in the suspension to be processed, decanters are used. The decanter design is based on decades of experience in centrifuge separation techniques as well as intensive research and development by the GEA Westfalia Separator Group. Decanters have been developed for high clarifying performance and highest possible degree of solids drying.

Essential conditions for this include, among others, high bowl speed and an enormously high screw torque in conjunction with a control system to synchronise the differential speed to the solids load.

The processed material enters the decanter through the feed tube and is conveyed by the distributor into the separating chamber. It is accelerated here to the operating speed. Solid particles quickly sediment on the bowl wall due to centrifugal force.

The bowl has a cylindrical-conical shape. In the cylindrical section, this shape allows effective clarification of the liquid, and the solids are effectively dried in the conical section.

The scroll turns slightly faster than the bowl shell and conveys separated solids continuously to the narrow end of the bowl. Due to the conical shape of this part of the bowl, the solids are lifted out of the liquid.

When passing the "drying zone", which the liquid does not enter, the adhering liquid is removed under to centrifugal force.

The solids are then ejected through openings at the bowl's end into the collecting vessel of the housing. The liquid flows between the scroll flights to the opposite end of the bowl. Lighter particles remaining in the liquid are separated by centrifugal force when passing through the clarifying zone and are conveyed by the scroll together with the solids seized in the inlet zone to the outlet. Clarified liquid leaves the separation chamber over adjustable regulating plates or is extracted under pressure by scrapers.

Depending on decanter type, the drive is provided either by 3-phase motors for starting under load or standard motors with hydrostatic clutches. 3-phase motors with frequency converters can be employed optionally. This allows for reduction of starting current and current peaks during starting. An adjustable, hydrostatic clutch reduces the starting current. Power is transmitted by belts.

GEA Westfalia Separator summationdrive

The **summation**drive always provides the full torque across the entire regulation range. It supplies only the power which is actually required, because the secondary motor is operated purely as a motor, and there are no braking effects. Accordingly, the drive does not require any backdrive and provides savings in terms of unnecessary conversion losses as well as belt drives, shaft loads and construction space. In the version used for higher differential speeds, the drive combines the output of the primary and secondary motor (summation) and thus minimizes energy consumption.

Conversion to the higher differential speed range is possible without having to replace the gear. In both drive versions, the differential speed is provided over large ranges without any interruptions.

The drive is equipped with a multiple-stage oil-lubricated planetary gear with two input shafts. Three planetary gears of different sizes for each decanter size enable the decanters to be simply adjusted to changed process conditions and requirements applicable to the torque.

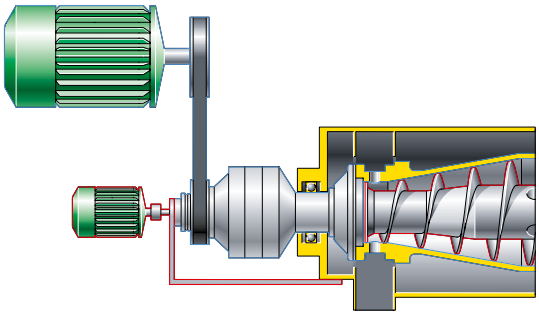

summationdrive with torque arm
(for diff. speed of 1 – 25 U/min)

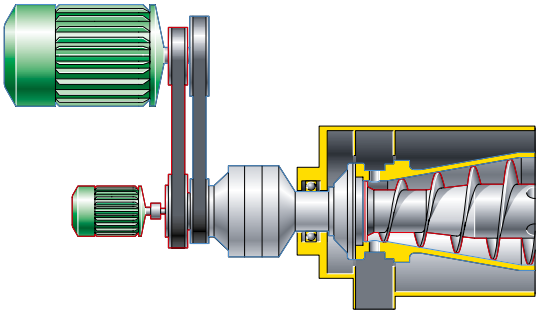

summationdrive with two pulleys
(for diff. speed of > 25 U/min)

Decanters synonymous with quality, performance and economy

- Highest possible dewatering at maximum separating efficiency
- High operating safety, reliability and low wear
- Rapid adjustment of machine parameters to changing products and processes
- Small space requirement
- Low cost of labour and operating expenses
- Automatic and continuous operation
- Simple operation and easy maintenance
- High-precision manufacturing ensures easy onsite replacement of all parts
- Easy access
- Simple assembly / disassembly
- Fast delivery of spare parts and 24-hour repair service

We live our values.

Excellence • Passion • Integrity • Responsibility • GEA-versity

GEA Group is a global engineering company with multi-billion euro sales and operations in more than 50 countries. Founded in 1881, the company is one of the largest providers of innovative equipment and process technology. GEA Group is listed in the STOXX® Europe 600 Index.

GEA Mechanical Equipment

GEA Westfalia Separator Group GmbH

Werner-Habig-Straße 1, 59302 Oelde, Germany
Phone: +49 2522 77-0, Fax: +49 2522 77-2089
www.gea.com

B_BE-13-03-0010 EN